VON DUPRIN®

98/9975 Mortise Lock Exit Devices

Service manual

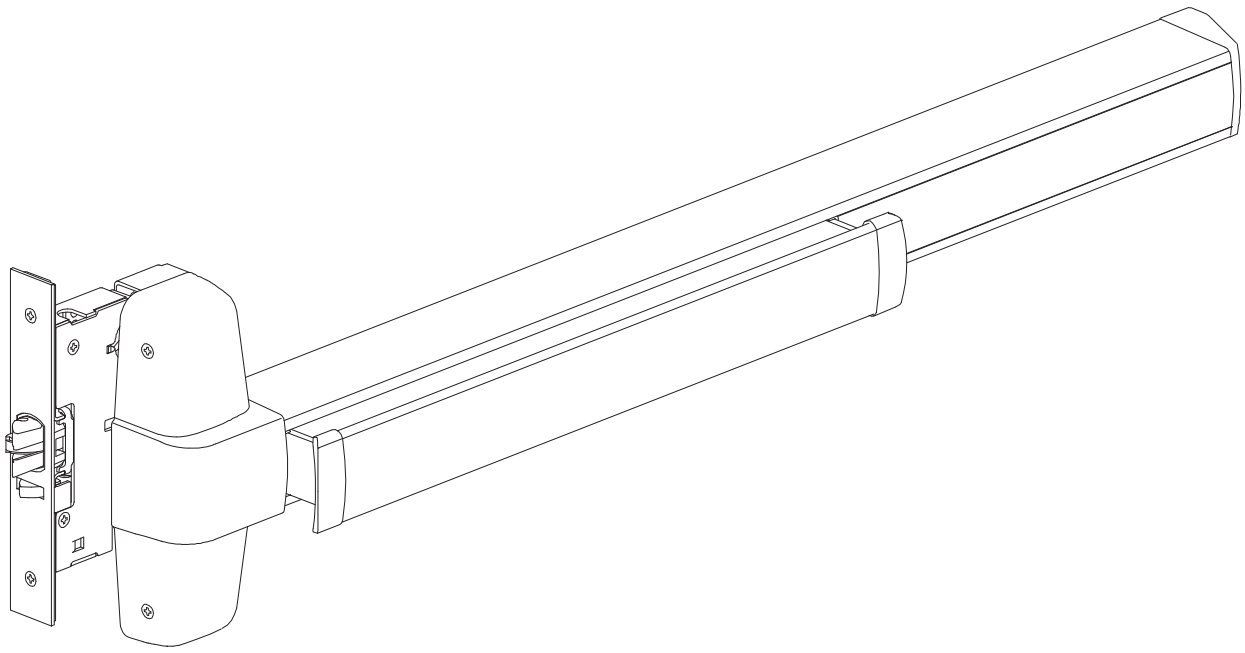

INDEX

98/9975 Devices
- Basic Panic Device 4-5
- Basic Fire Device 6-7
- Baseplate Assemblies 8
- Center Case Assembly 9

Variations of the Basic Device
- CD (Cylinder Dogging) 4-5
- 98/9975-2 (Double Cylinder) 9
- HD-EL (Hex Dogging/Electric Latch Retraction) 10
- EL (Electric Latch Retraction) 11
- SS (Signal Switch) 11
- RX (Request to Exit) 12-13
- LX (Latch Bolt Monitoring) 12-13
- CX (Chexit Discontinued) 14
- CX (Chexit New) 15
- CX (Chexit New RCM/DE5300 Option) 16
- ALK (Exit Alarm Kit) 17
- 7500 Mortise Lock 18-19
- E7500 Mortise Lock (F.S.E.) 20
- E7500 Mortise Lock (F.S.) 21
- SS7500 Mortise Lock 22

Service Replacement Items 23-24

General Information
- Introduction 2
- How to Order 2
- Part Number Changes 2
- Finishes 3
- Outside Trim Functions 3
- Strikes 3

INTRODUCTION

This manual contains a listing of replaceable parts and assemblies for the 98/9975 Exit Hardware Devices. 98 Series and 99 Series devices are almost identical. The 99 Series has a grooved case; the 98 Series has a smooth case.

HOW TO ORDER

Some parts are sold separately. Other items are available as part of a kit or multiple quantity package. For the best possible service when ordering replacement parts or assemblies, please provide the following information:

- Part number or assembly number
- Description
- Quantity needed
- Finish desired (if available finished)
- Date of original purchase (if known)

PART NUMBER AND AVAILABILITY CHANGES

This manual was designed to help illustrate the replacement parts and kits that are available for sale. Because of changes to the product and/or manufacturing process, part numbers and availability can change over time.

98/99 SERIES FINISHES

U.S. Std Reference	BHMA Reference	Description
US3	605	Polished Brass
US4	606	Dull Brass
US10	612	Dull Bronze
US15	619	Satin Nickel
US26	625	Polished Chrome
US26D	626	Dull Chrome
US28	628	Anodized Alum. (Clear)
US32D	630	Satin Stainless Steel
313AN	710	Anodized Alum. (313) Dark Bronze
315AN	711	Anodized Alum. (Black)

OUTSIDE TRIM FUNCTIONS

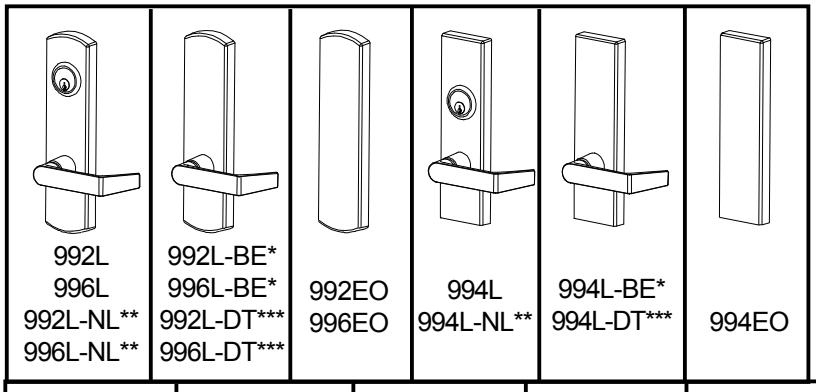

992L
996L
992L-NL**
996L-NL**

992L-BE*
996L-BE*
992L-DT***
996L-DT***

992EO
996EO

994L
994L-NL**

994L-BE*
994L-DT***

994EO

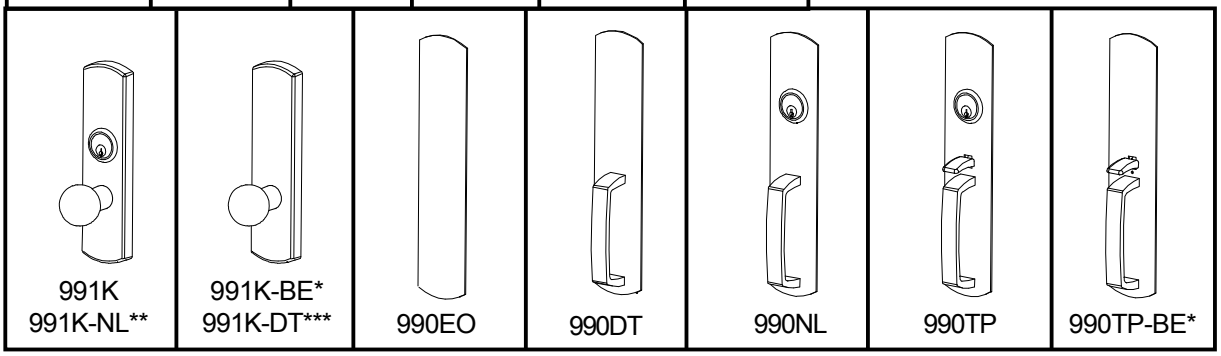

991K
991K-NL**

991K-BE*
991K-DT***

990EO

990DT

990NL

990TP

990TP-BE*

* "BE" (Blank Escutcheon) no cylinder used - lever always active
** "NL" (Night Latch) rigid lever - key retracts latch bolt
*** "DT" (Dummy Trim) rigid lever for pull operation
**** "OP" (Optional Pull) needs to be added

MORTISE STRIKES

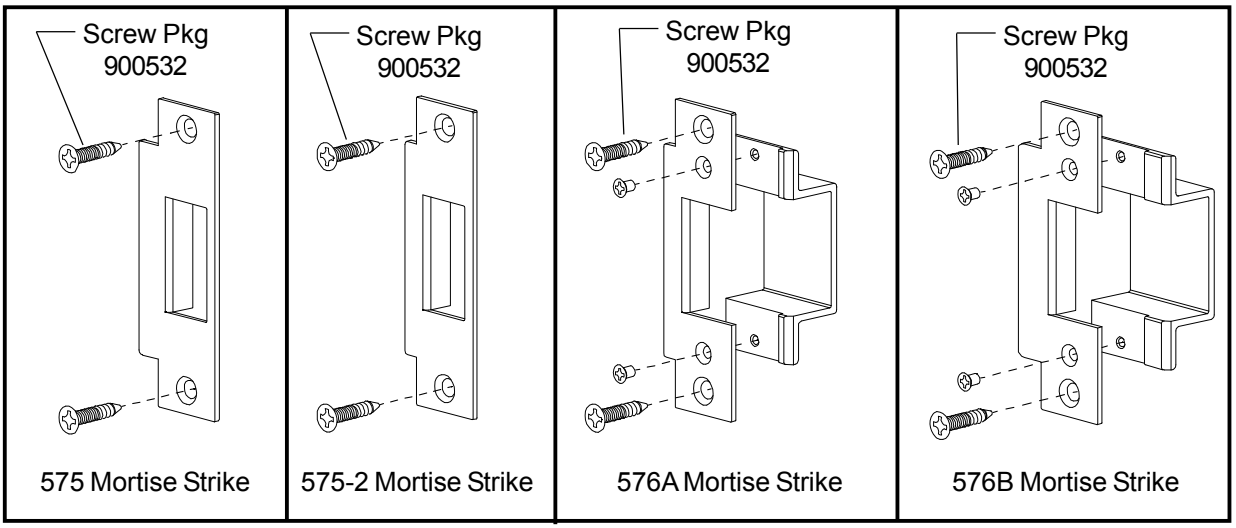

575 Mortise Strike | 575-2 Mortise Strike | 576A Mortise Strike | 576B Mortise Strike

98/9975 MORTISE PANIC DEVICE

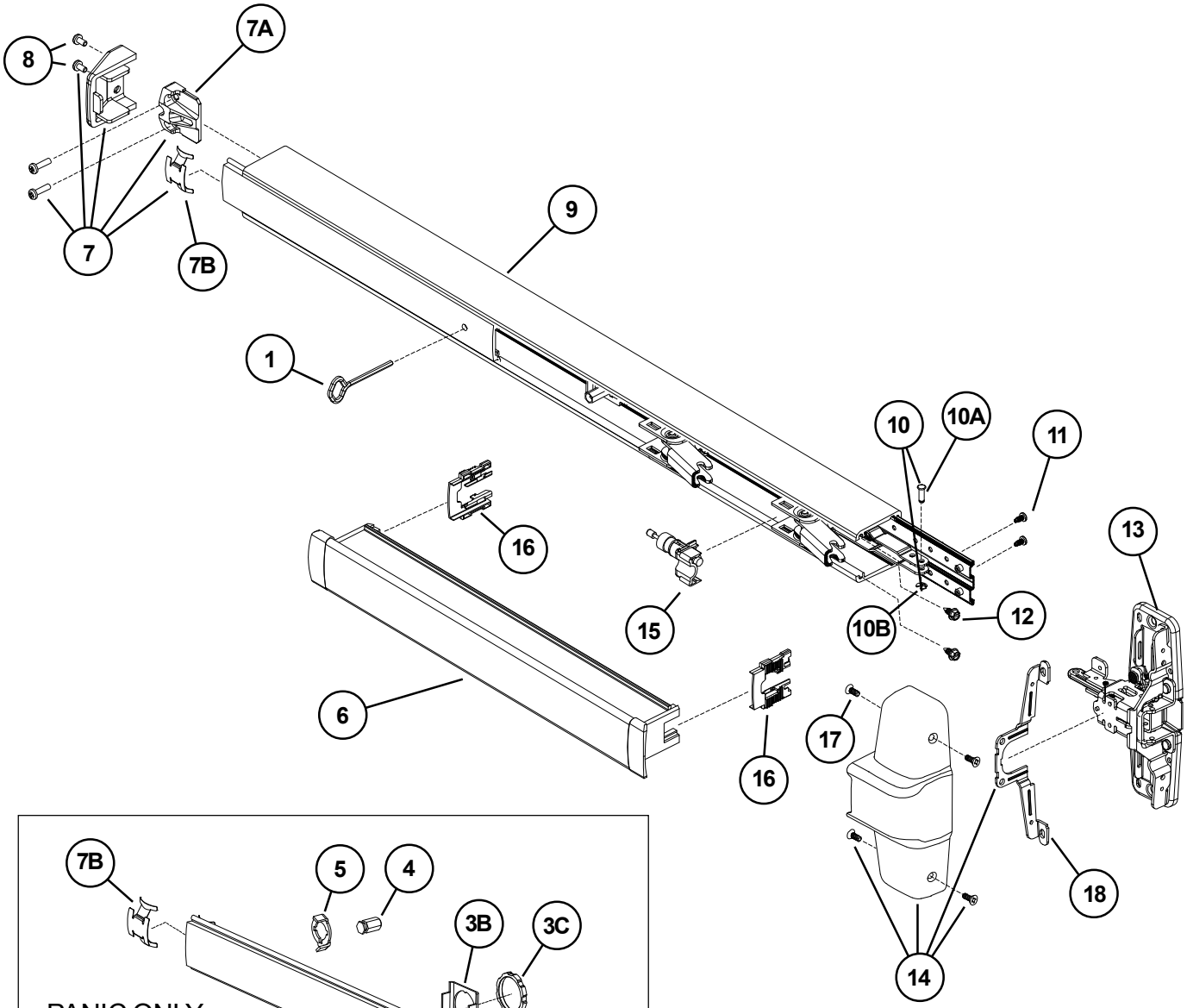

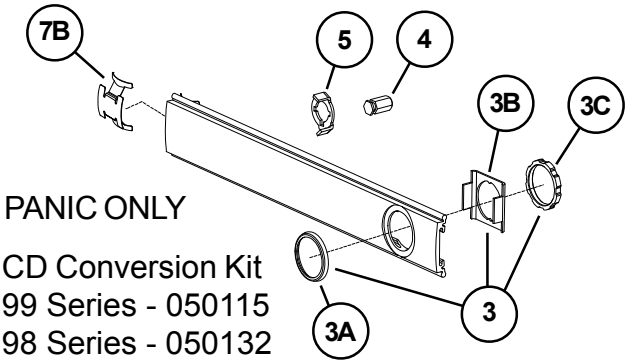

PANIC ONLY

CD Conversion Kit
99 Series - 050115
98 Series - 050132

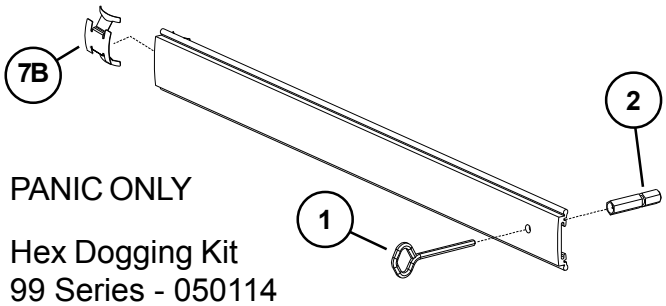

PANIC ONLY

Hex Dogging Kit
99 Series - 050114
98 Series - 050117

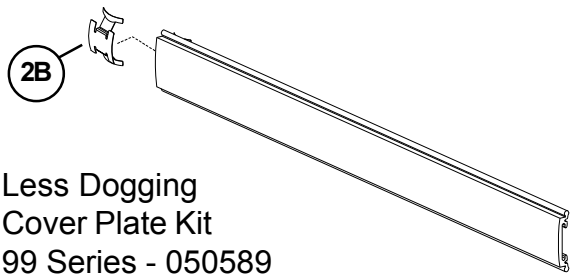

Less Dogging
Cover Plate Kit
99 Series - 050589
98 Series - 050588

98/9975 MORTISE PANIC DEVICE

Item No.	Quantity	Part No.	Description	Finish
	1	900561	98/99 Series Mounting Pkg. (1-3/4 & 2-1/4)	
1	1	090085	227 Dog Key 5/32" Hex (Pkg of 10)	
1	1	090005	227 Dog Key 5/32" Hex (Pkg of 2)	
2	1	090040	Hex Dog Shaft (Pkg of 2)	
3	1	107813	Cylinder Mounting Pkg	X
3A	1	050525	Cylinder Collar	X
3B	1	050490	Cylinder Locating Washer - CD/SS	
3C	1	050526	Cylinder Locknut	
4	1	090046	CD Dogging Plug (Pkg of 2)	
5	1	090045	CD Actuator Arm (Pkg of 2)	
6	1	*PBKIT	98/99 Series Push Bar Retrofit Kit - 3' Door	X
6	1	*PBKIT	98/99 Series Push Bar Retrofit Kit - 4' Door	X
7	1	050014	98/99 Series End Cap Kit	X
7A	1	050524	Impact Resistant End Cap Bracket	
7B	1	090036	Cover Plate Anti-rattle Spring (Pkg of 10)	
8	1	900597	Device End Cap and C/Case Screw Pkg.	X
9	1	968144	99 Series Mechanism Case - 3' Door	X
9	1	968146	99 Series Mechanism Case - 4' Door	X
9	1	970191	98 Series Mechanism Case - 3' Door	X
9	1	970192	98 Series Mechanism Case - 4' Door	X
10	1	050529	98/99 Series Control Link Pin & Ret. Ring	
10A	1	090031	98/99 Series Control Link Pin (Pkg of 10)	
10B	1	090107	Retaining Ring (Pkg of 10)	
11	2	090037	#8-32 x 3/8" Baseplate Screw (Pkg of 10)	
12	2	090073	Mechanism Case Bracket Screw (Pkg of 10)	
13***	1	050023	98/9975 Center Case Less Cover	
14**	1	050073	98/9975 Center Case Cover Kit	X
15	1	050491	Shock Absorber & Holder Assembly	
16	2	090049	Push Bar Guide (Pkg of 10)	
17	4	900892	Center Case Cover Screws (Pkg of 4)	X
18	1	050564	Center Case Cover Bracket	

X in "Finish" column designates finished items; finish must be specified when ordering.

* To order, specify device type, size, and finish. Example: PBKIT 98 3' US28

**Includes parts for three piece cover conversion

***Center case assembly parts shown on page 9.

98/9975-F FIRE DEVICE

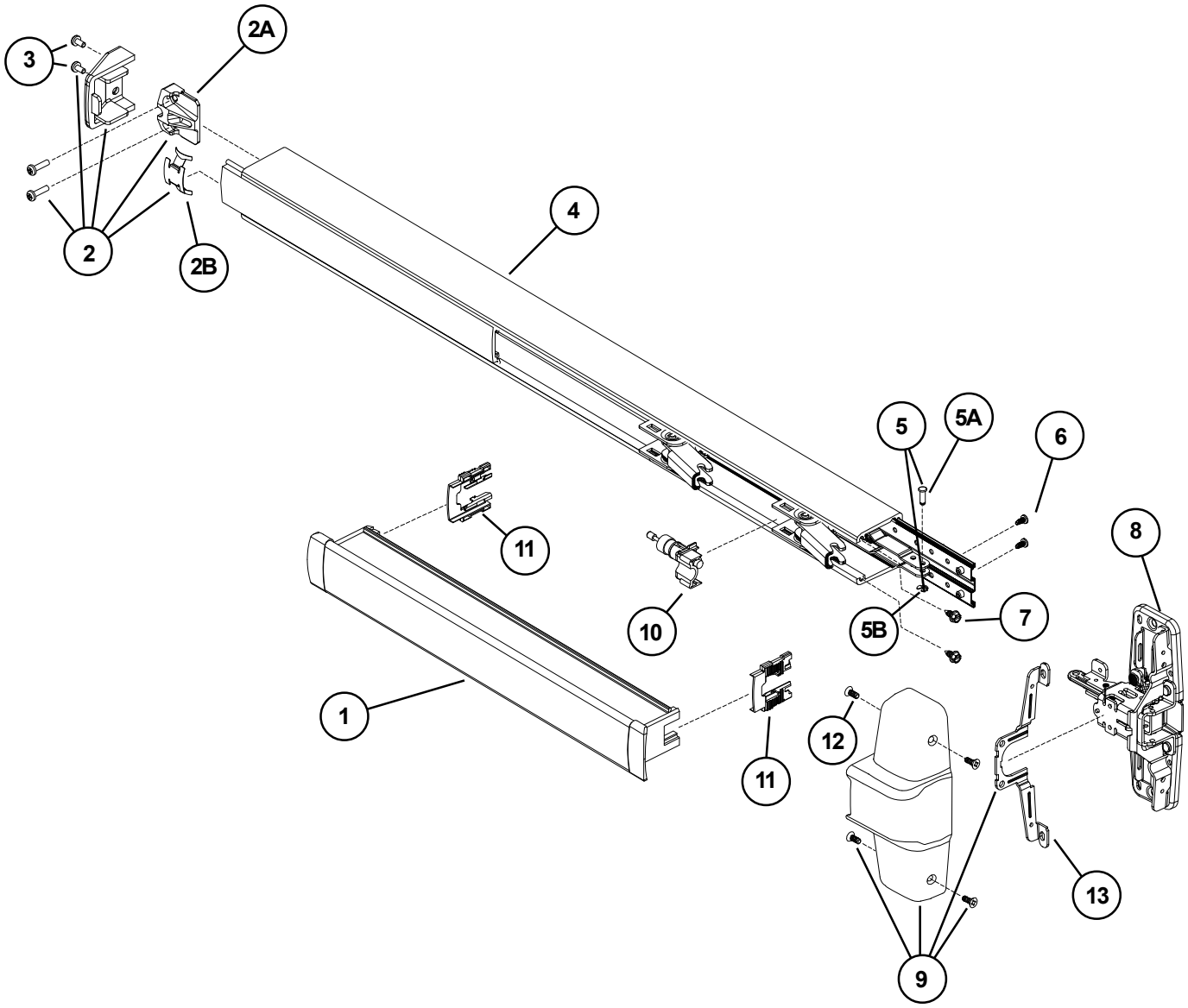

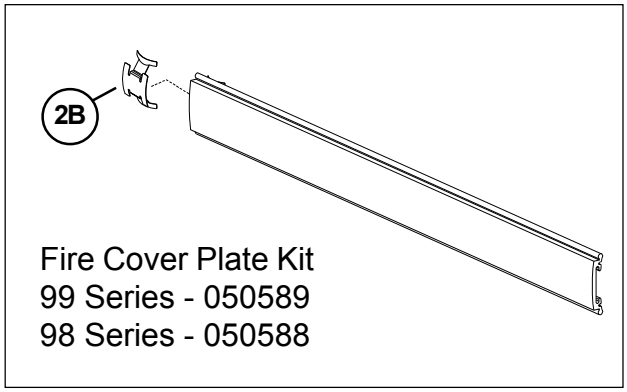

98/9975-F FIRE DEVICE

Item No.	Quantity	Part No.	Description	Finish
	1	900561	98/99 Series Mounting Pkg. (1-3/4 & 2-1/4)	
1	1	*PBKIT	98/99 Series Push Bar Retrofit Kit - 3’ Door	X
1	1	*PBKIT	98/99 Series Push Bar Retrofit Kit - 4’ Door	X
2	1	050014	98/99 Series End Cap Kit	X
2A	1	050524	Impact Resistant End Cap Bracket	
2B	1	090036	Cover Plate Anti-rattle Spring (Pkg of 10)	
3	1	900597	Device End Cap and C/Case Screw Pkg.	X
4	1	968144	99 Series Mechanism Case - 3’ Door	X
4	1	968146	99 Series Mechanism Case - 4’ Door	X
4	1	970191	98 Series Mechanism Case - 3’ Door	X
4	1	970192	98 Series Mechanism Case - 4’ Door	X
5	1	050529	98/99 Series Control Link Pin & Ret. Ring	
5A	1	090031	98/99 Series Control Link Pin (Pkg of 10)	
5B	1	090107	Retaining Ring (Pkg of 10)	
6	2	090037	#8-32 x 3/8” Baseplate Screw (Pkg of 10)	
7	2	090073	Mechanism Case Bracket Screw (Pkg of 10)	
8***	1	050023	98/9975 Center Case Less Cover	
9**	1	050073	98/9975 Center Case Cover Kit	X
10	1	050491	Shock Absorber & Holder Assembly	
11	2	090049	Push Bar Guide (Pkg of 10)	
12	4	900892	Center Case Cover Screws (Pkg of 4)	X
13	1	050564	Center Case Cover Bracket	

X in “Finish” column designates finished items; finish must be specified when ordering.

* To order, specify device type, size, and finish. Example: PBKIT 98 3’ US28

**Includes parts for three piece cover conversion

***Center case assembly parts shown on page 9.

98/9975 PANIC DEVICE BASEPLATE ASSEMBLY

Item No.	Quantity	Part No.	Description	Finish
1	1	090043	Dogging adapter (Pkg of 2)	
2	1	090042	Dogging adapter spring (Pkg of 2)	
3	1	090041	Dogging spring (Pkg of 2)	
4	1	090040	Hex dogging shaft (Pkg of 2)	
5	1	090044	Dogging hook (Pkg of 2)	
6	1	090039	Latch return spring (Pkg of 10)	
7	4	090038	Rubber bumper (Pkg of 4)	
8	1	050491	Shock absorber	

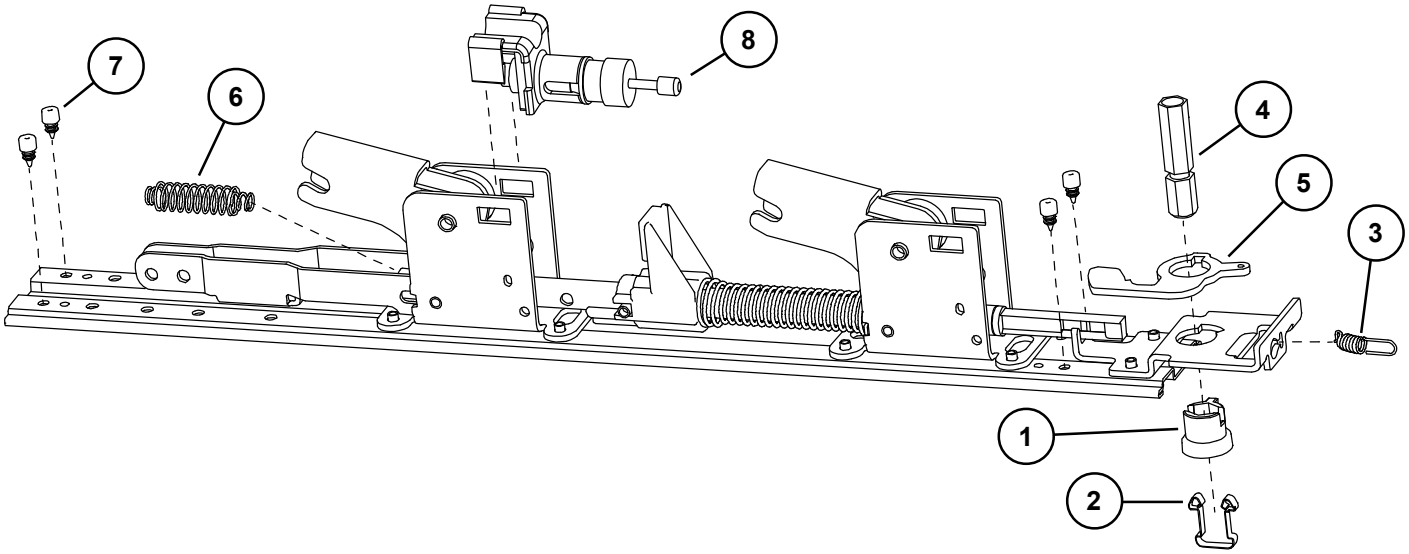

98/9975-F FIRE DEVICE BASEPLATE ASSEMBLY

Item No.	Quantity	Part No.	Description	Finish
1	4	090038	Rubber bumper (Pkg of 4)	
2	1	090039	Latch return spring (Pkg of 10)	
3	1	050491	Shock absorber	

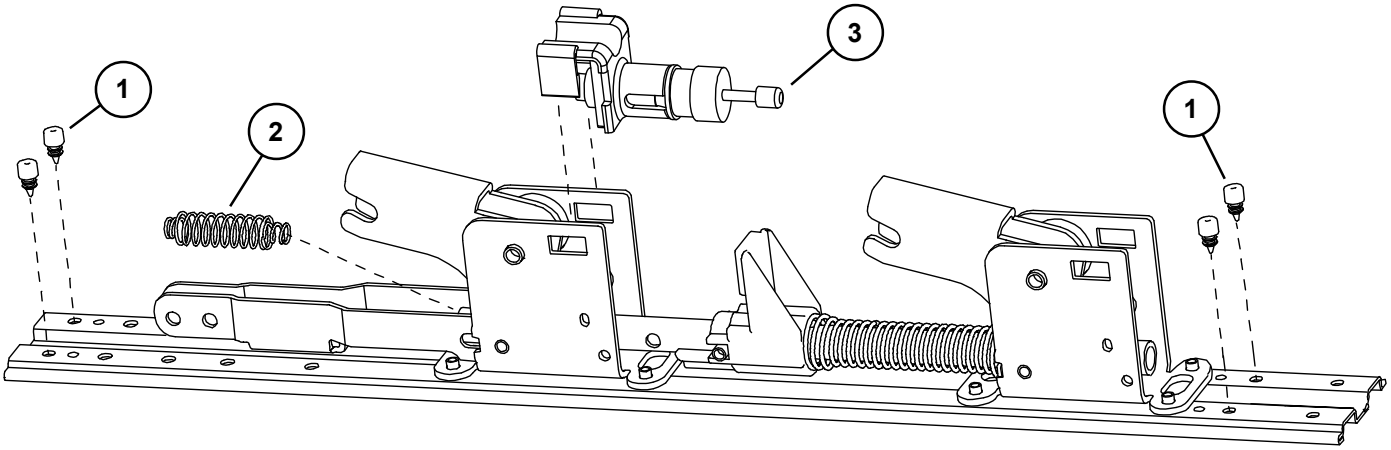

98/9975 DEVICE CENTER CASE ASSEMBLY

Item No.	Quantity	Part No.	Description	Finish
1	1	050565	Center Case Reinforcing Bracket	

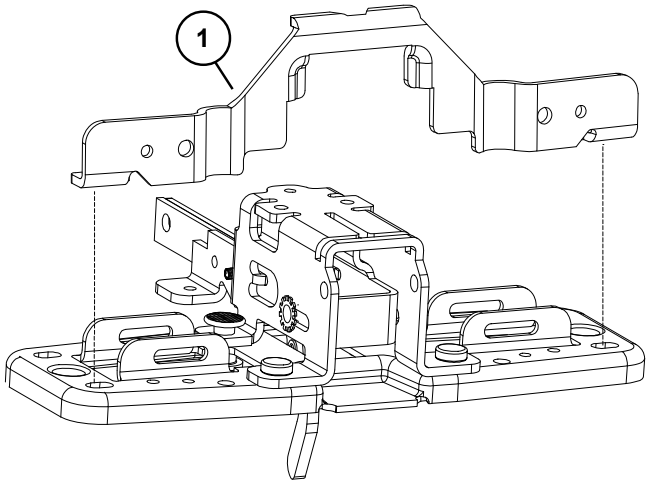

98/9975-2 & 98/9975-F-2 DOUBLE CYLINDER OPTION

Item No.	Quantity	Part No.	Description	Finish
1	1	050029	98/9975-2 RHR Center Case Less Cover	
1	1	050030	98/9975-2 LHR Center Case Less Cover	
2	1	113100	98/9975-2 Cylinder Bracket Assembly LHR	X
2	1	113101	98/9975-2 Cylinder Bracket Assembly RHR	X
3	1	050557	98/9975-2/SD RHR Center Case Cover Kit	X
3	1	050558	98/9975-2/SD LHR Center Case Cover Kit	X
4	4	900892	Center Case Cover Screws (Pkg of 4)	X

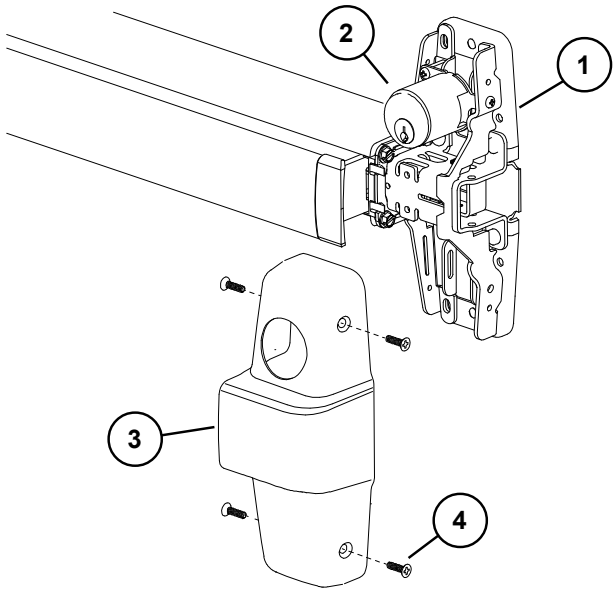

HD-EL9875/HD-EL9975 HEX DOGGING/ELECTRIC LATCH RETRACTION OPTION

Item No.	Quantity	Part No.	Description	Finish
1	1	050531	EL Dogging Rod Kit - 3’ device	
1	1	050532	EL Dogging Rod Kit - 4’ device	
2	1	110388	EL 6’ Cable and Connector	
3	1	050534	EL Potted Module	
4	1	050536	HD-EL Solenoid	
5	1	050537	HD-EL Solenoid Plunger	
6	1	050538	EL Dogging Rod Retainer	
7	1	050539	EL Receptacle Connector - 2 Position	
8	2	050540	EL Female Terminal	
9	1	050541	HD-EL Dog Screw	
10	1	050542	HD-EL Solenoid Bracket	
11	1	050543	HD-EL Dogging Spring	
12	1	990599	EL Plug Connector - 2 Position	
13	1	990857	EL Receptacle Connector - 3 Position	
14	1	990858	EL Plug Connector - 3 Position	
*	1	050384	HD-EL Conversion Kit - 3’	
*	1	050385	HD-EL Conversion Kit - 4’	

*Kit includes items 1-11 plus new control link, retaining ring, and baseplate screws.

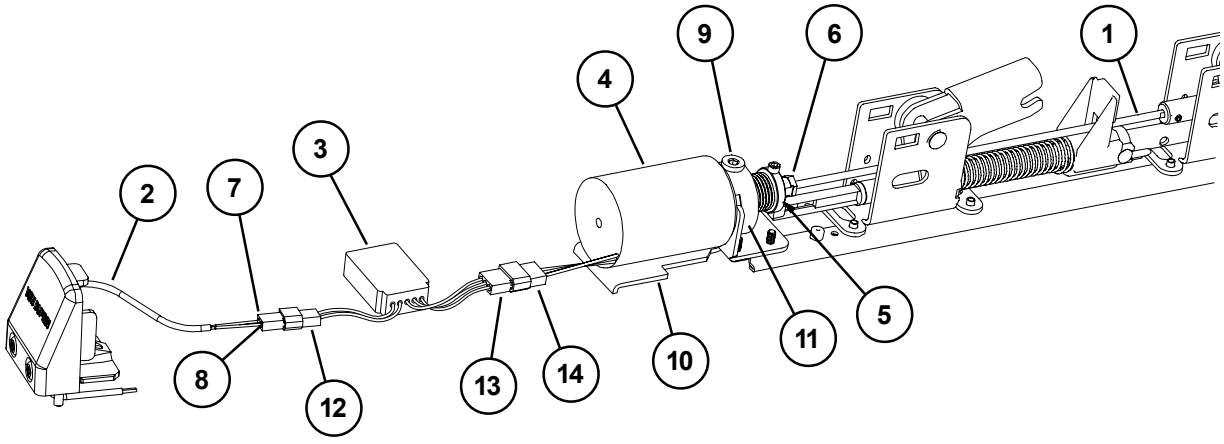

EL9875/EL9975 SERIES ELECTRIC LATCH RETRACTION OPTION

Item No.	Quantity	Part No.	Description	Finish
1	1	050531	EL Dogging Rod Kit - 3’ device	
1	1	050532	EL Dogging Rod Kit - 4’ device	
2	1	110388	EL 6’ Cable and Connector	
3	1	050534	EL Potted Module	
4	1	050535	EL Solenoid Assembly	
5	1	050538	EL Dogging Rod Retainer	
6	1	050539	EL Receptacle Connector	
7	2	050540	EL Female Terminal	
8	1	990599	EL Plug Connector - 2 Position	
9	1	990857	EL Receptacle Connector - 3 Position	
10	1	990858	EL Plug Connector - 3 Position	
*	1	050070	EL Conversion Kit - 3’	
*	1	050078	EL Conversion Kit - 4’	

*Kit includes items 1-7 plus new control link pin, retaining ring, and baseplate screws.

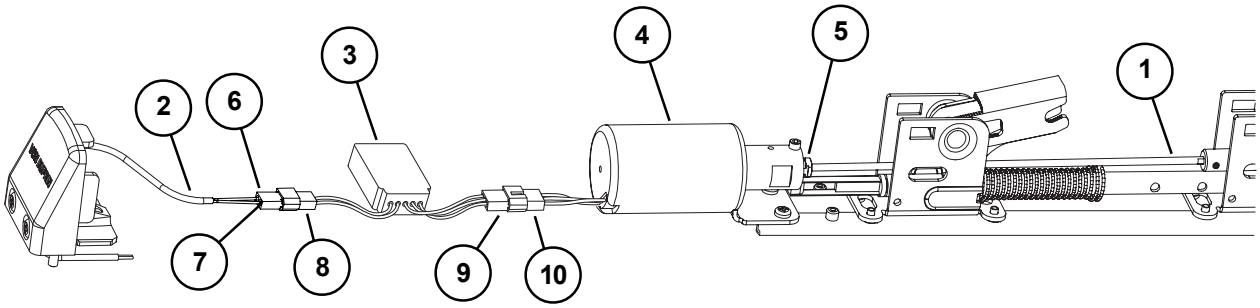

SS9875/SS9975 SERIES (SIGNAL SWITCH) OPTION

Item No.	Quantity	Part No.	Description	Finish
1	1	050544	SS Cable	
2	1	050545	SS Housing	
3	1	990601	SS Plug Connector - 6 Position	
4	1	990602	SS Receptacle Connector - 6 Position	

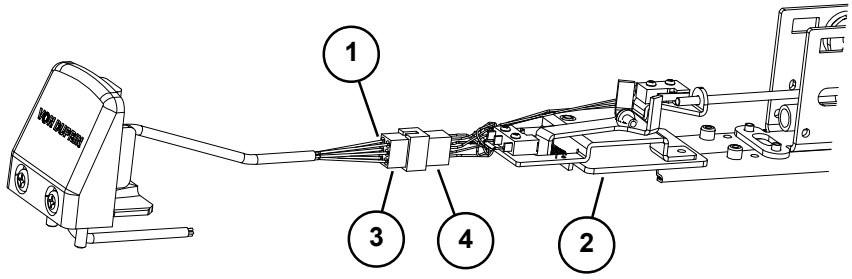

98/99 SERIES LX (LATCH BOLT MONITOR) & RX (REQUEST TO EXIT) OPTIONS

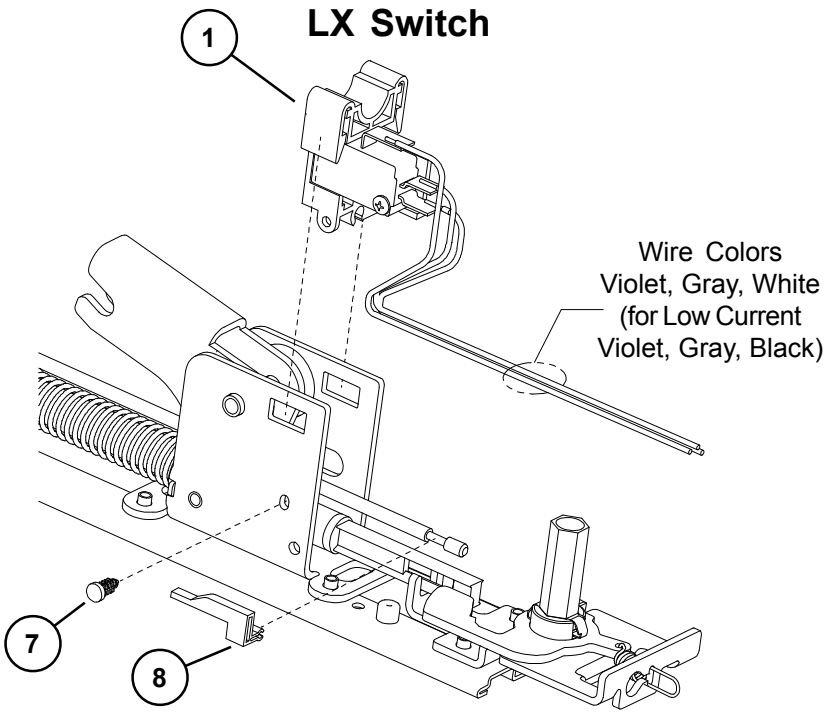

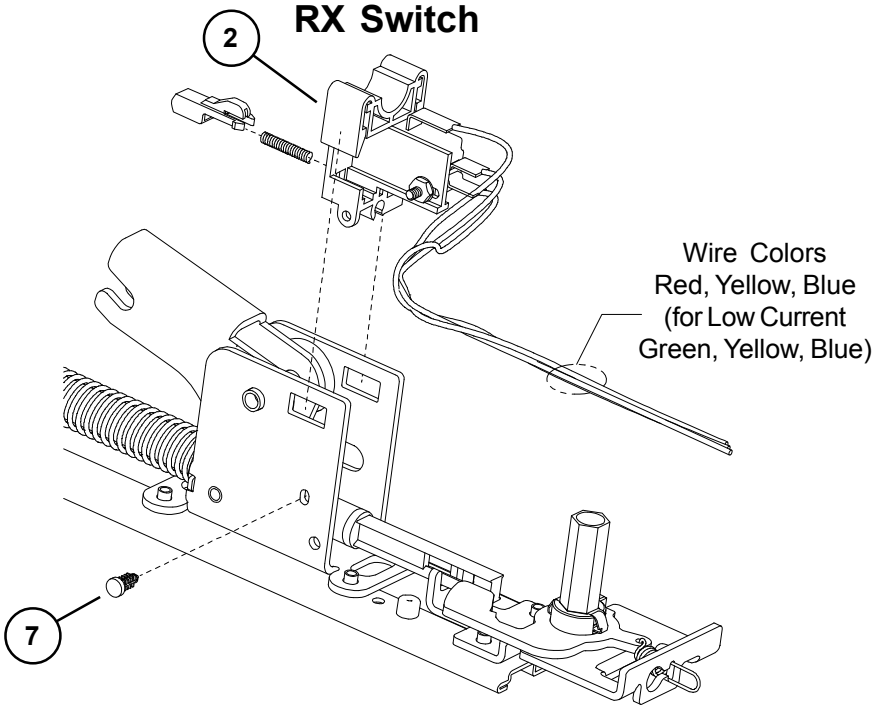

98/99 SERIES LX (LATCH BOLT MONITOR) & RX (REQUEST TO EXIT) OPTIONS

Item No.	Quantity	Part No.	Description	Finish
1	1	050254	LX Switch Kit 3’ Device	
1	1	050255	LX Switch Kit 4’ Device	
1	1	050247	LX-EL Switch Kit	
1	1	050283	LX-LC (Low Current) Switch Kit 3’ Device	
1	1	050285	LX-LC (Low Current) Switch Kit 4’ Device	
1	1	050287	LX-LC-EL (Low Current) Switch Kit	
2	1	050251	RX Switch Kit	
2	1	050281	RX-LC (Low Current) Switch Kit	
3	1	050256	LX-RX Switch Kit 3’ Device	
3	1	050257	LX-RX Switch Kit 4’ Device	
3	1	050259	LX-RX-EL Switch Kit	
3	1	050289	LX-RX-LC (Low Current) Sw. Kit 3’ Device	
3	1	050291	LX-RX-LC (Low Current) Sw. Kit 4’ Device	
3	1	050293	LX-RX-LC-EL (Low Current) Switch Kit	
2 & 4	1	050270	RX-2 Switch Kit	
4	1	050271	RX-AUX Switch Kit	
5	1	964558	8-32 x 5/16” PPHMS	
6	1	964019	#8 Washer	
7	1	090099	Pine Tree Clip (Pkg of 10)	
8	1	971091	LX Actuator	

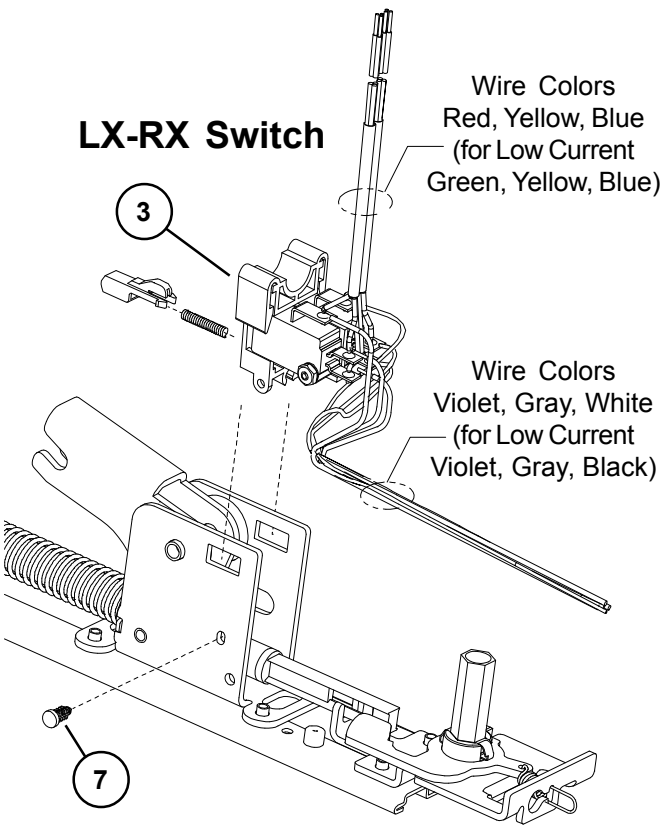

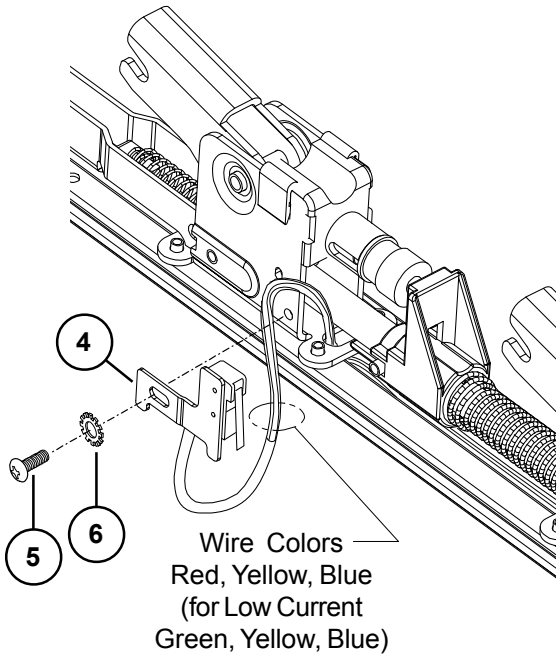

CX98/9975 SERIES CHEXIT

For discontinued Chexit devices made before August, 24 2015

Item No.	Quantity	Part No.	Description	Finish
1	1	050228	Chexit PCB Kit - 15 Second Release	
1*	1	050700	Chexit PCB Kit - 30 Second Release	
1	1	050701	Chexit PCB Kit - 0 Second Release	
1	1	050702	Chexit PCB Kit - Boca 15 Second Release	
1*	1	050703	Chexit PCB Kit - Boca 30 Second Release	
2	1	050533	CX Solenoid and Plunger	
3	1	113111	Faceplate and Adapter	X
4	4	963898	6-32 x 3/8” OPHMS Faceplate Screws	X
5	1	991338	RCM 2-Wire RX Cable	
6	1	991339	RCM 3-Wire Solenoid Cable	
7	1	112018	Chexit Wiring Assembly	
8	1	991336	CX-RCM Cable Assy - 5 Wire	
9	1	090036	Cover Plate Anti-rattle Spring (Pkg of 10)	
10	1	970513	LED Cover Mask - Chexit	
11	1	970519	LED Cover - Chexit	
12	1	113781	Sign 15 Second - Chexit	
13	1	113782	Sign 30 Second - Chexit	

*Over 15 second delay requires a letter of approval from the authority having local jurisdiction over the premises prior to the installation of the device. Allegion cannot grant such approval nor does it warrant local jurisdiction compliance.

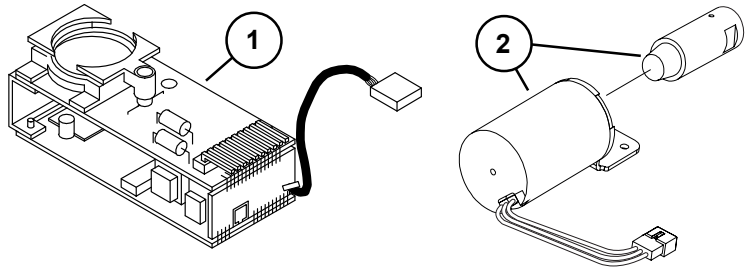

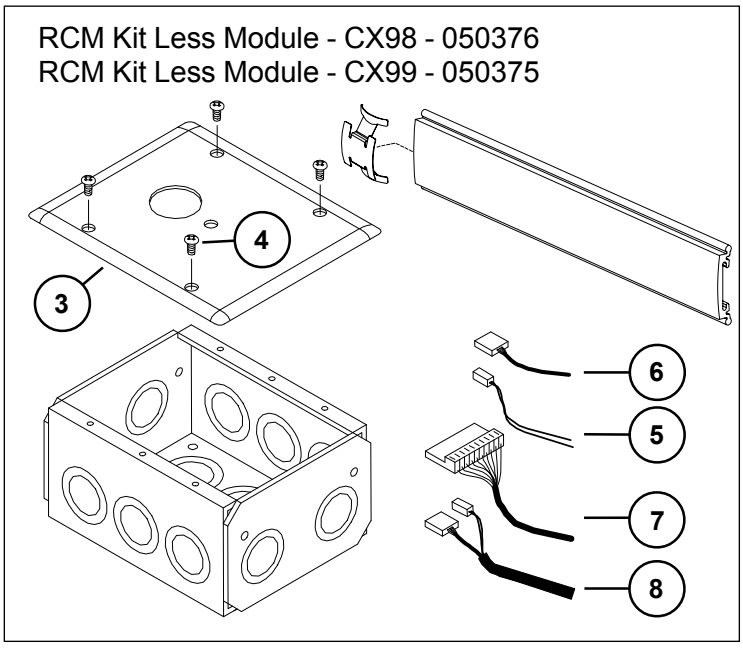

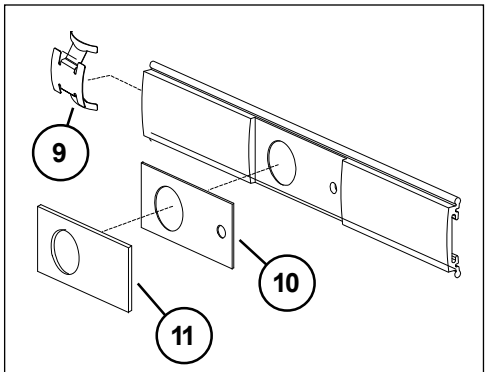

CX Cover Plate Kit
99 Series - 050572
98 Series - 050573

CX98/9975 SERIES CHEXIT

For new Chexit devices made after August, 24 2015

Item No.	Quantity	Part No.	Description	Finish
1	1	040086	Standard - 15 Second Release Delay	
1*	1	040087	Special Infinite Release Delay	
1*	1	040088	Special 30 Second Release Delay	
1	1	040089	Special 0 Second Release Delay	
1	1	040090	Special Mute 15 Second Release Delay	
1	1	040091	BOCA 15 Second Release Delay	
2	1	040191	CX Field Wiring Cable	
3	1	040192	CX Motor Cable	
4	1	040193	CX Trim Device Cable	
5	1	116717	CX RX Switch Assembly	
6	1	040170	CX Key Switch Assembly 3'	
6	1	040189	CX Key Switch Assembly 4'	
7	1	040093	CX33/99 Cover Plate Kit	X
7	1	040094	CX35/98 Cover Plate Kit	X
8	1	113781	Sign 15 Second	
9	1	113782	Sign 30 Second	

*Over 15 second delay requires a letter of approval from the authority having local jurisdiction over the premises prior to the installation of the device. Allegion cannot grant such approval nor does it warrant local jurisdiction compliance.

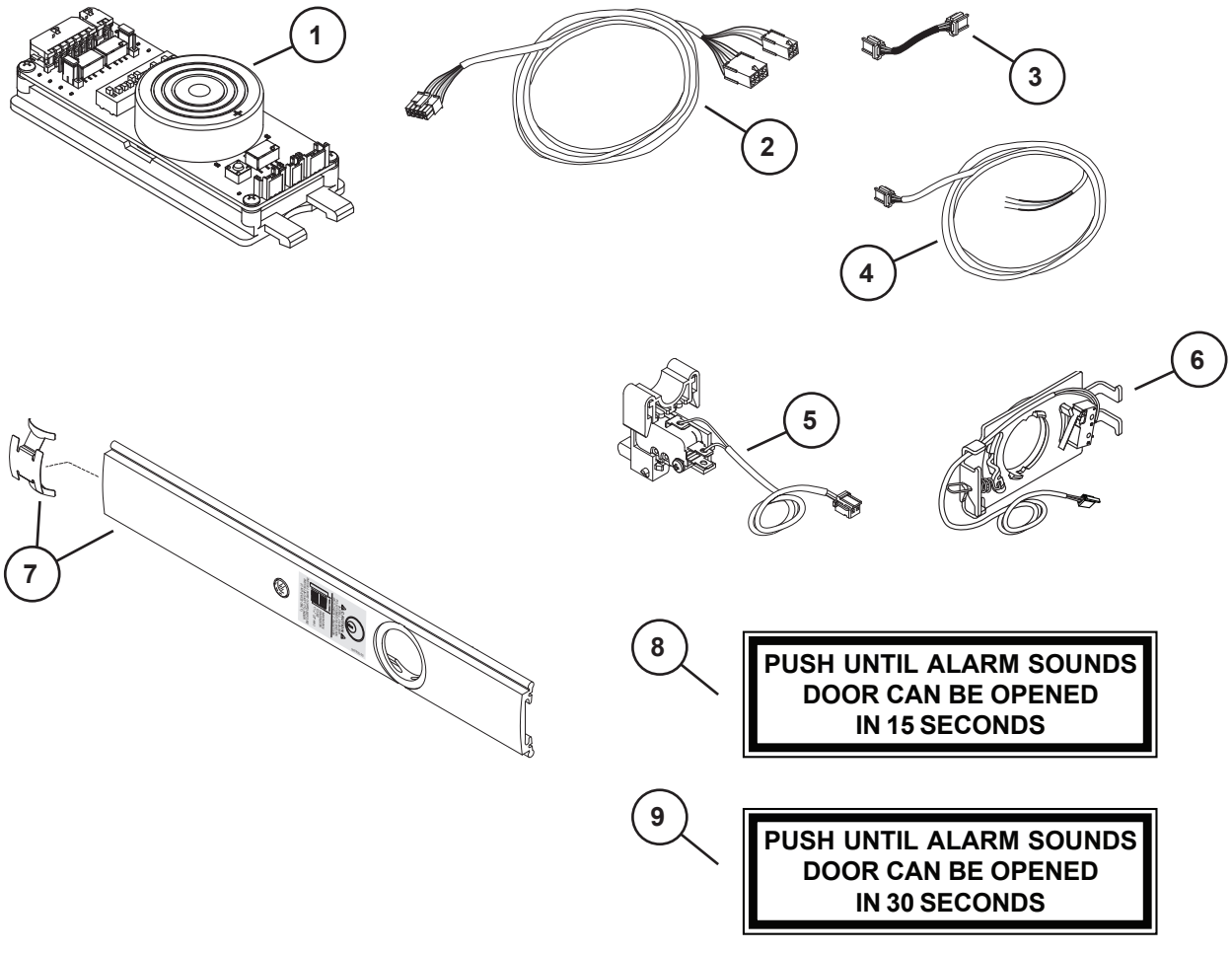

CX-RCM/DE5300 OPTIONS

For new RCM/DE5300 devices made after August, 24 2015

Item No.	Quantity	Part No,	Description	Finish
1	1	116711	Standard - 15 Second Release Delay	
2	1	040092	RCM Device Cable	
3	1	040188	DE5300/RCM Cable Kit	
4	1	040198	RCM Kit Less Module - CX33/99	X
4	1	040199	RCM Kit Less Module - CX35/98	X
5	1	040169	DE5300/RCM Key Switch Assy	
6	1	113781	Sign 15 Second	

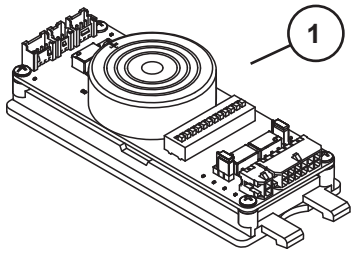

3 RCM/DE5300 Cable Kit

Field Wiring Cable

Device Wiring Cable

4 RCM Kit Less Module - CX33/99 - 040198
RCM Kit Less Module - CX35/98 - 040199

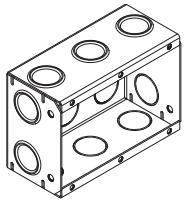

Control Box

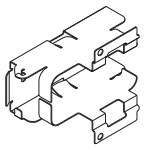

Mounting Bracket

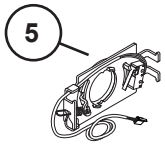

Key Switch

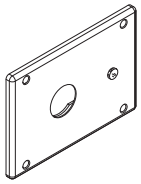

Faceplate

Field Wiring Cable

Device Wiring Cable

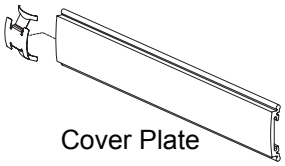

Cover Plate

#6-32 X 3/8" Faceplate Screws (4)

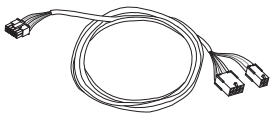

Door Wiring Cable

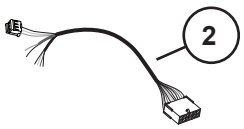

RCM Device Cable

#6-32 X 1/4" Mounting Bracket Screws (2)

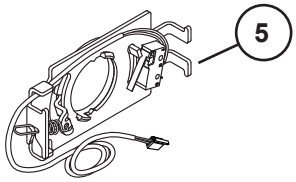

**PUSH UNTIL ALARM SOUNDS
DOOR CAN BE OPENED
IN 15 SECONDS**

98/99 ALK EXIT ALARM KIT

Item No.	Quantity	Part No.	Description	Finish
1	1	111795	ALK PCB Assembly	
2	1	050525	Cylinder Collar	X
3	1	969122	ALK Alarm Device Sign	
4	1	969349	ALK Arming Label	
5	1	969350	ALK Disarming Label	
6	1	969354	Retainer Nut	
7	1	970594	ALK Cylinder Spacer	
8	1	090036	Cover Plate Anti-rattle spring (Pkg of 10)	
9	1	971556	ALK Switch Actuator	
10	1	971557	ALK Cylinder Bracket	
11	1	990637	ALK Battery	
12	1	050569	99 Series ALK Cover Plate Kit	X
12	1	050570	98 Series ALK Cover Plate Kit	X

X in “Finish” column designates finished items; finish must be specified when ordering.

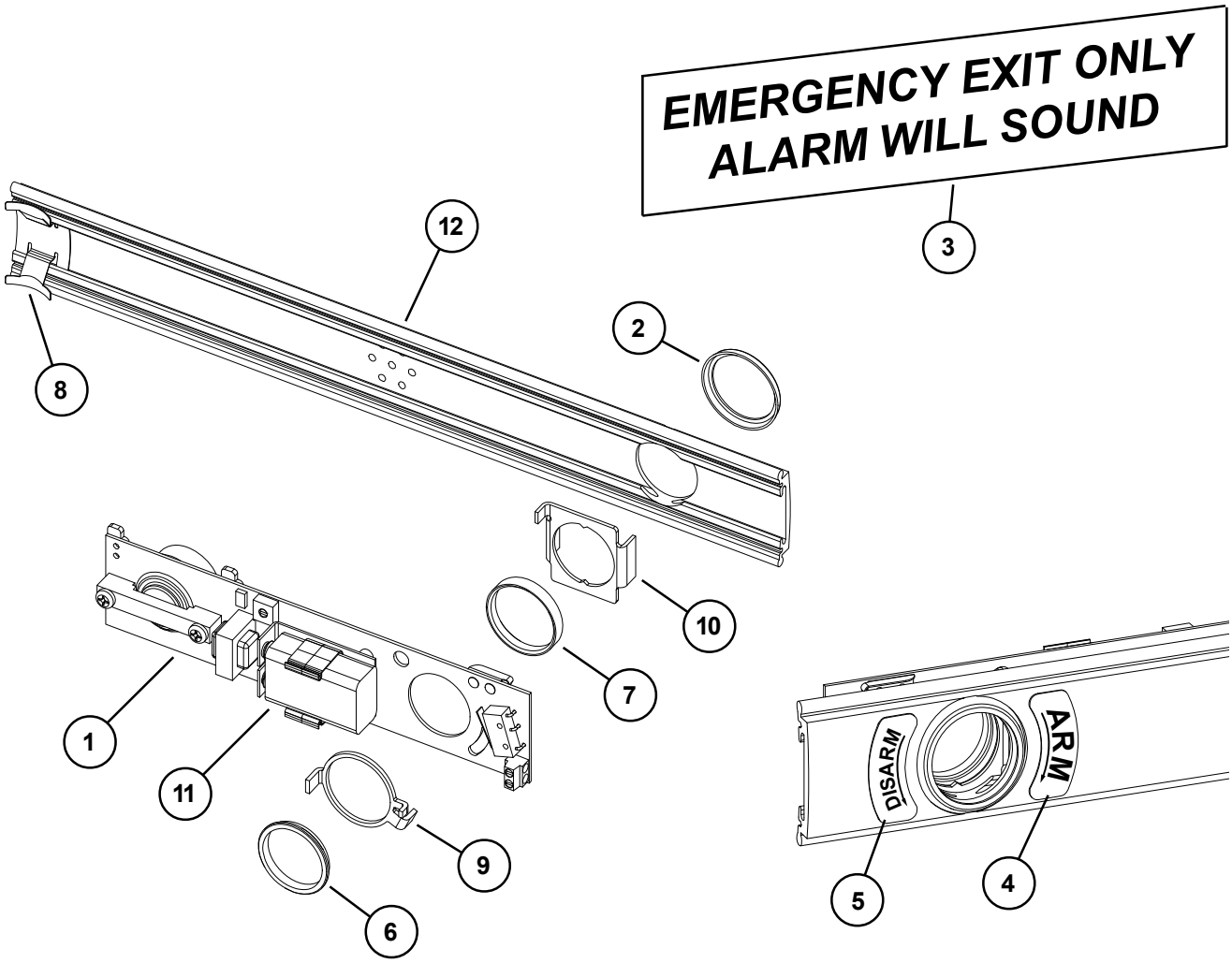

7500 MORTISE LOCK

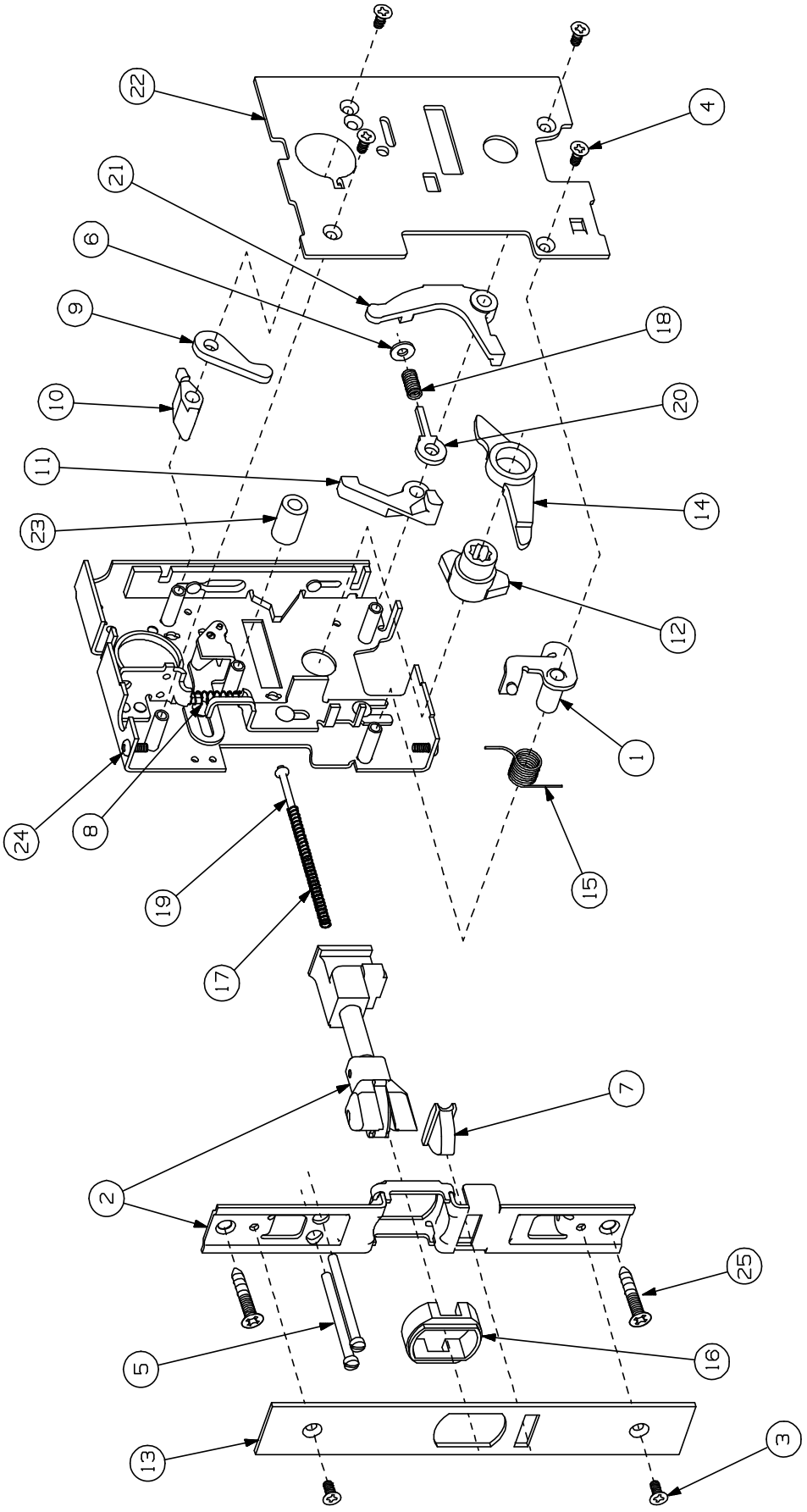

7500 MORTISE LOCK

Item No.	Quantity	Part No.	Description	Finish
1	1	109347	7500 Auxiliary Bolt Link Sub-Assembly	
2	1	109773	7500 Latchbolt and Faceplate Sub-Assembly	
3	2	963080	7500 Scalp Plate - 8-32 x 3/8" FPHMS	X
4	4	963812	7500 Hsg. Cover - 8-32 x 3/8" UFPHMS	
5	2	963954	7500 Cyl. Set - 8-32 x 2" Fill SHMS	
6	1	963984	#8 SAE Flat Washer	
7	1	968668	7500 Auxiliary Bolt	
8	1	968748	7500 Deadlocking Spring	
9	1	968761	7500 Trim Bolt Retractor	
10	1	968762	7500 Trim Lock Actuator	
11	1	968763	7500 Thumb Latch Lift	
12	1	968765	7500 Knob Cam	
13	1	968766	7500 Scalp Plate - Aluminum	X
13	1	970872	7500 Scalp Plate - Brass	X
13	1	970873	7500 Scalp Plate - Bronze	X
14	1	968773	7500 Deadlock Release Arm	
15	1	968935	7500 Auxiliary Bolt Spring	
16	1	968939	7500 Latchbolt Collar	
17	1	969089	7500 Latch Return Spring	
18	1	969364	7500 Trim Lock Slide Spring	
19	1	969610	7500 Latch Return Spring Guide	
20	1	970188	7500 Trim Lock Spring Guide	
21	1	970318	7500 Crossbar Input Arm	
22	1	971822	7500 Housing Cover	
23	1	970735	7500 Stem Support	
24	2	964390	8-32 x 3/8” PPHTF Screw	
25	2	900532	7500 Lock Mounting Pkg	

X in “Finish” column designates finished items; finish must be specified when ordering.

E7500 MORTISE LOCK FAIL SECURE (F.S.E)

Item No.	Quantity	Part No.	Description	Finish
1	1	050212	E7500 Solenoid Replacement Kit 12VDC FSE	
1	1	050214	E7500 Solenoid Replacement Kit 24VDC FSE	
2*	1	114294	E7500 Switch Kit	
3	1	110744	E7500 Switch Connector Assembly	
4	1	963974	E7500 Roll Pin - 3/32 x 9/16"	
5	1	968770	E/SS 7500 Switch Insulator	
6	1	969107	E7500 Torsion Spring	
7	1	971320	E7500 Solenoid Spring	
8	1	113186	E7500 Plunger Assembly FSE	
9	1	966504	Wire Strain Relief	
10	1	970866	E7500 Thumb Latch Lift	
11	1	970318	7500 Crossbar Input Arm	
12	1	970596	E7500 Cable Clamp	
13	1	964558	E7500 Cable Clamp Screw	
14	2	970868	E7500 Switch Insulator	
15	2	964393	E7500 Switch Insulator Screw	
16	2	964269	E7500 Switch Wiring Assembly Screw	
17	1	114140	Hook Up Wire Assembly	

* Kit includes items 2 and 16 plus the switch wiring assembly (red/yellow/blue wires), switch assembly (white/gray/violet wires) and connectors.

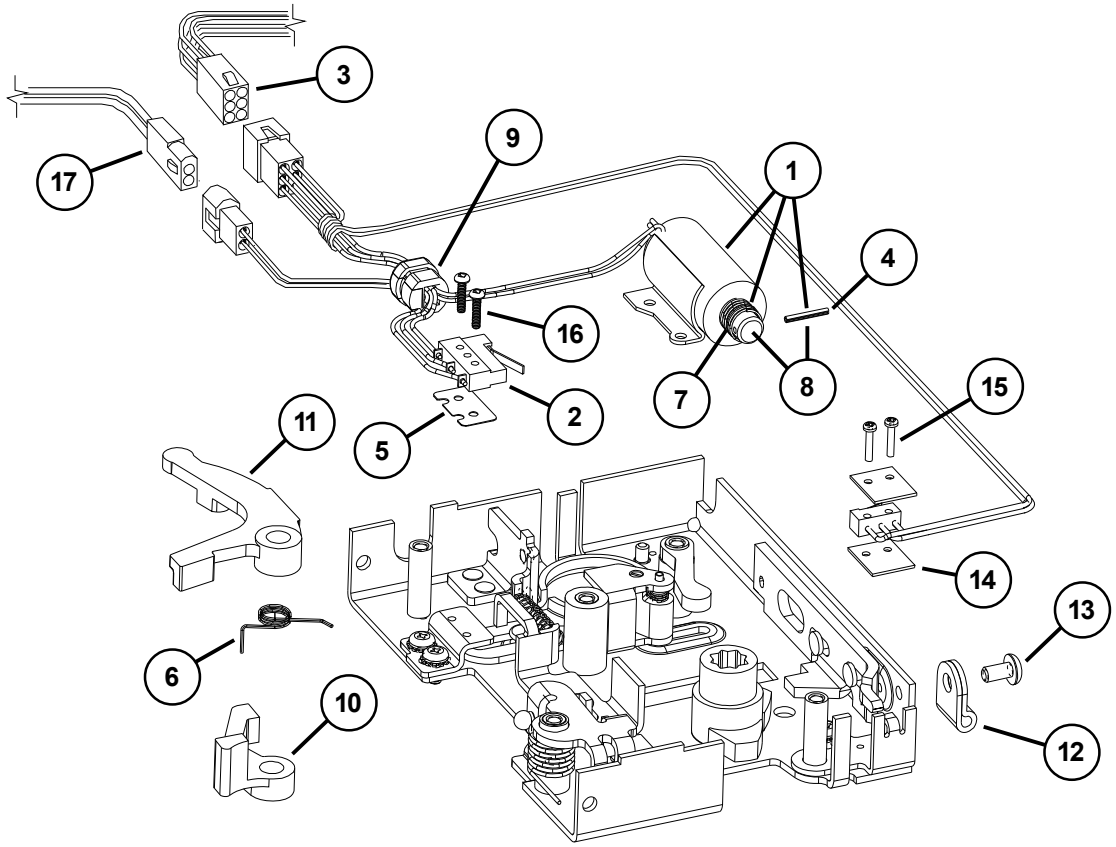

E7500 MORTISE LOCK FAIL SAFE (F.S.)

Item No.	Quantity	Part No.	Description	Finish
1	1	050213	E7500 Solenoid Replacement Kit 12VDC FS	
1	1	050215	E7500 Solenoid Replacement Kit 24VDC FS	
2*	1	114294	Switch Wiring Assembly (R/Y/B Wires)	
3	1	110744	E7500 Switch Connector Assembly	
4	1	963974	E7500 Roll Pin - 3/32 x 9/16"	
5	1	968770	E/SS 7500 Switch Insulator	
6	1	969107	E7500 Torsion Spring	
7	1	970861	E7500 Lever Screw	
8	1	970862	E7500 Lever Spacer	
9	1	972549	E7500 FS Trim Lock Lever	
10	1	113187	E7500 Plunger Assembly FS	
11	1	966504	Wire Strain Relief	
12	1	970866	E7500 Thumb Latch Lift	
13	1	970318	7500 Crossbar Input Arm	
14	1	970596	E7500 Cable Clamp	
15	1	964558	E7500 Cable Clamp Screw	
16	2	970868	E7500 Switch Insulator	
17	2	964393	E7500 Switch Insulator Screw	
18	2	964269	E7500 Switch Wiring Assembly Screw	
19	1	114140	Hook Up Wire Assembly	
20	1	970546	E7500 Trim Lock Slide Spring FS	

* Kit includes items 3 and 18 plus the switch wiring assembly (red/yellow/blue wires), switch assembly (white/gray/violet wires) and connectors.

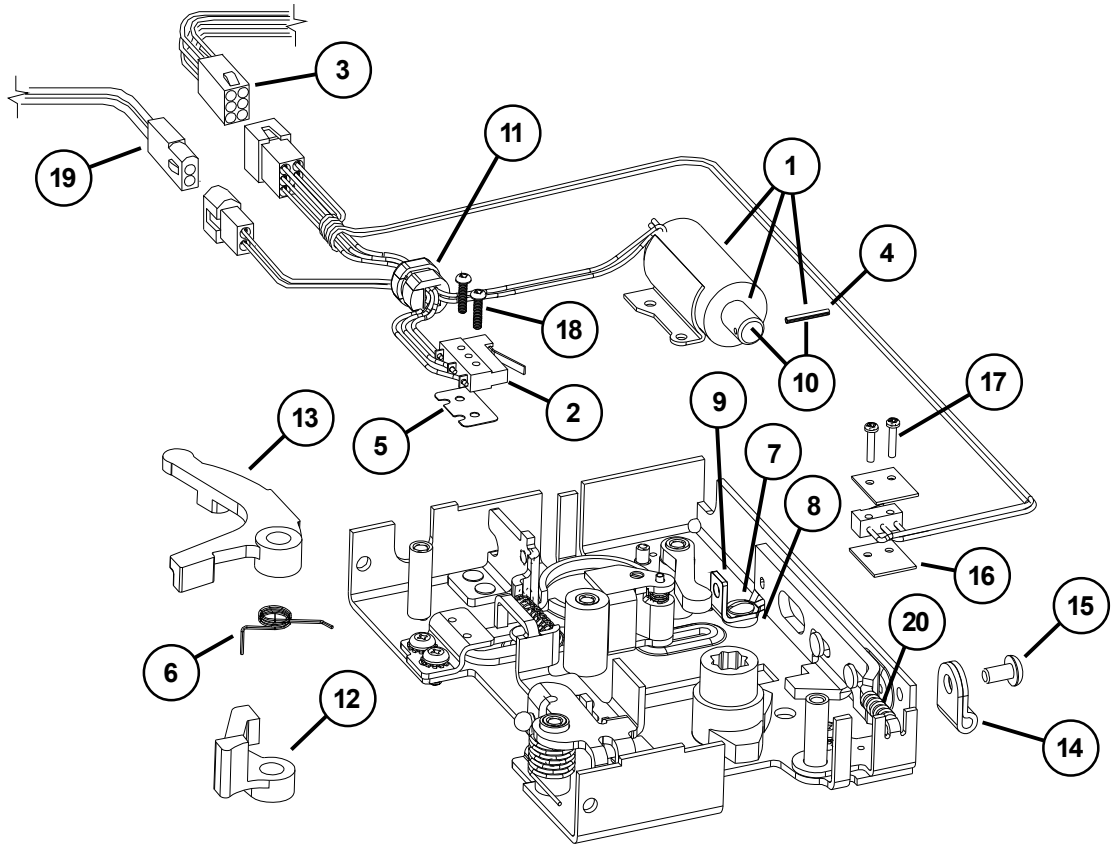

SS7500 MORTISE LOCK

Item No.	Quantity	Part No.	Description	Finish
1	1	109658	Switch Wiring Assembly (R/Y/B Wires)	
2	1	109659	Switch Wiring Assembly (V/G/W Wires)	
3	2	968770	E/SS 7500 Switch Insulator	
4	4	964299	SS7500 Switch Wiring Assembly Screws	

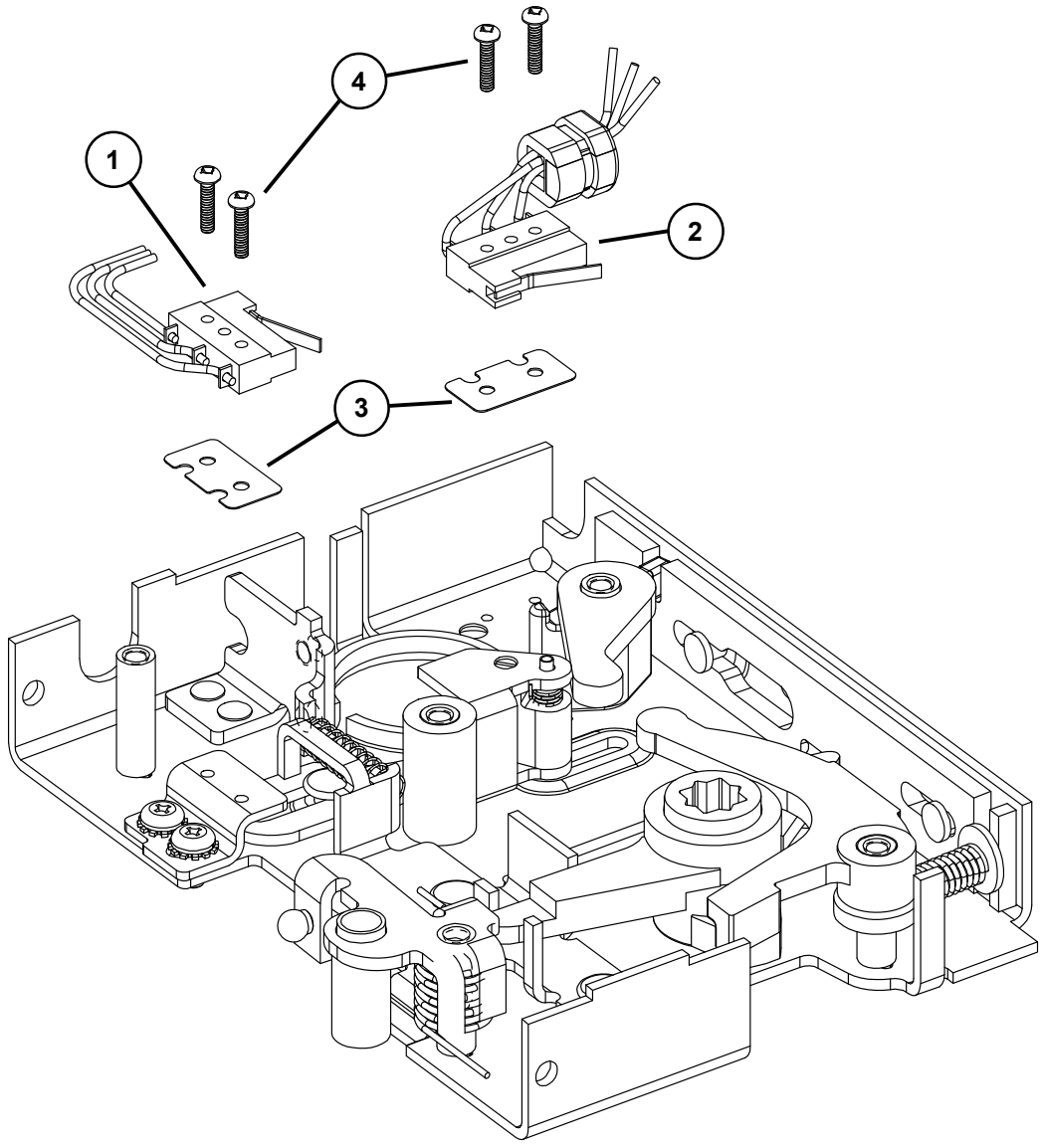

98/99 SERIES SERVICE REPLACEMENT ITEMS

Item No.	Quantity	Part No.	Description	Finish
1	1	050153	Old Style Hex Dogging Replacement Kit	
2	1	963909	#22 Hitch Pin - Hex/CD Dogging Old Style	
3	1	968112	Old Style Hex Dog Shaft	
4	1	969941	Old Style Dogging Hook	
5	1	968116	Old Style CD Actuator Arm	
6	1	900905	Old Style End Cap and Bracket Assembly	X
7	1	970548	Old Style Cover Plate Stop - End Cap	
8	1	900901	Old Style End Cap Screw Package	X
9	1	971082	Old Style 98/99 End Cap - Stainless Steel	X
9	1	971083	Old Style 98/99 End Cap - Brass	X
9	1	971084	Old Style 98/99 End Cap - Bronze	X
9	1	971085	Old Style 98/99 End Cap - Aluminum	X

X in “Finish” column designates finished items; finish must be specified when ordering.

OLD STYLE DOGGING PARTS
(FOR DEVICES SHIPPED BEFORE AUGUST 1997)

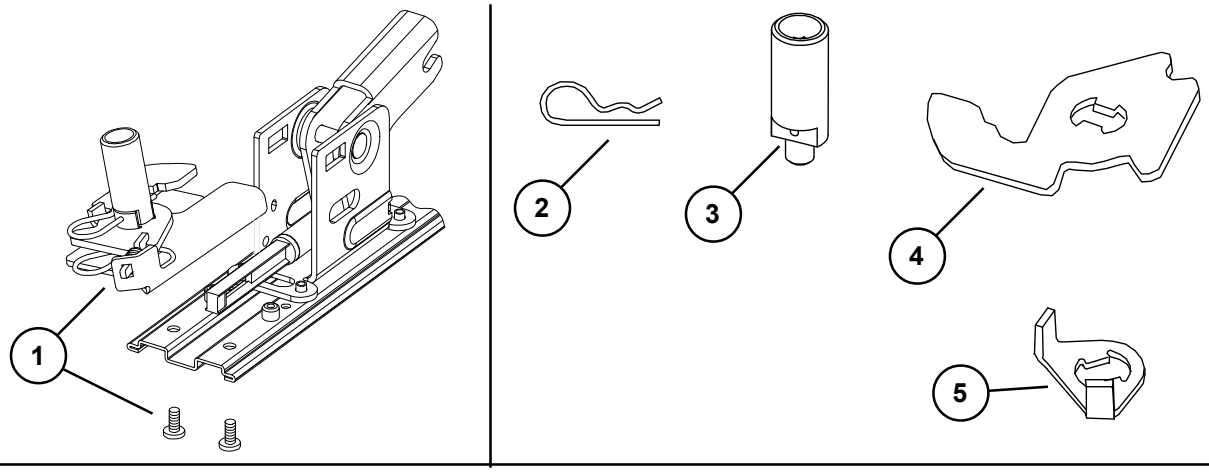

OLD STYLE END CAP PARTS

(FOR DEVICES SHIPPED BEFORE JANUARY 2002)

Note: Newer style end cap kit shown on pages 4-5. Newer style end cap kit can be used on devices manufactured before January 2002, but mechanism case and cover plate on hinge stile must have a square cut and a clean edge.

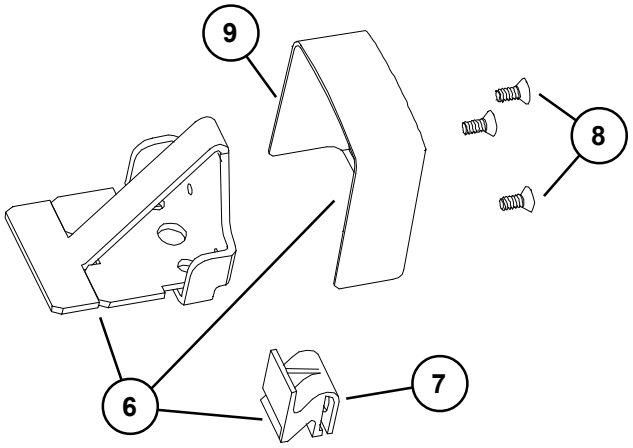

98/99 SERIES SERVICE REPLACEMENT ITEMS

Item No.	Quantity	Part No.	Description	Finish
1	1	050218	EL Solenoid Replacement Kit	

X in “Finish” column designates finished items; finish must be specified when ordering.

EL SOLENOID REPLACEMENT KIT

(FOR DEVICES SHIPPED BEFORE JANUARY 1987)
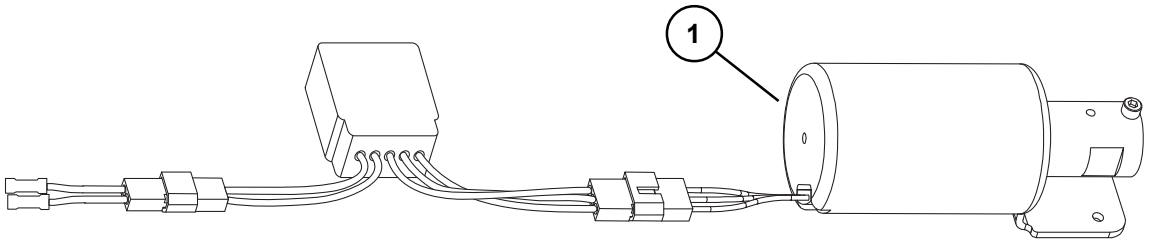
Note: This kit replaces the old style EL solenoid parts with the new style.