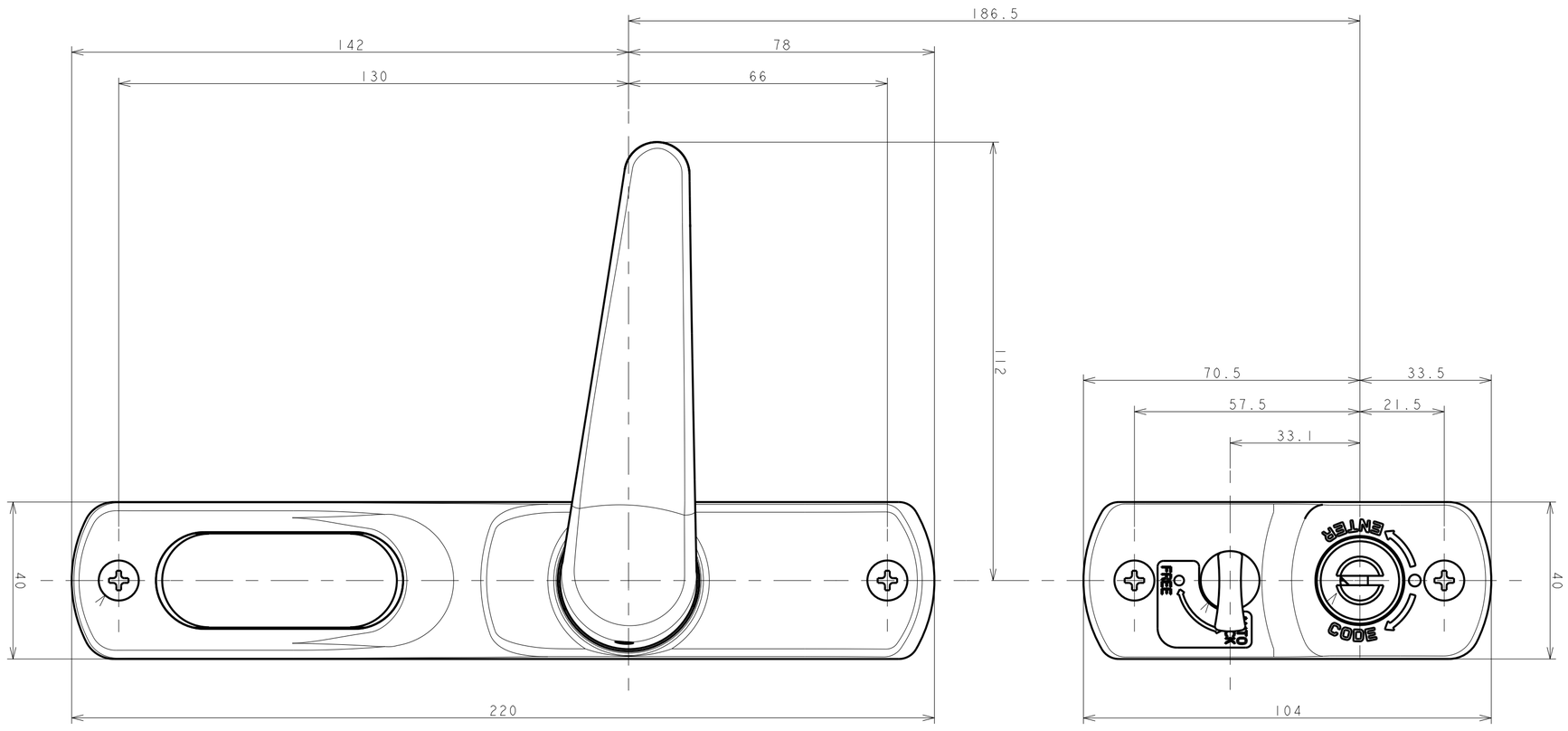
186.5
142
78
130
66
112
70.5
33.5
57.5
21.5
33.1
40
FREE
OK
ENTER
CODE
40
220
104

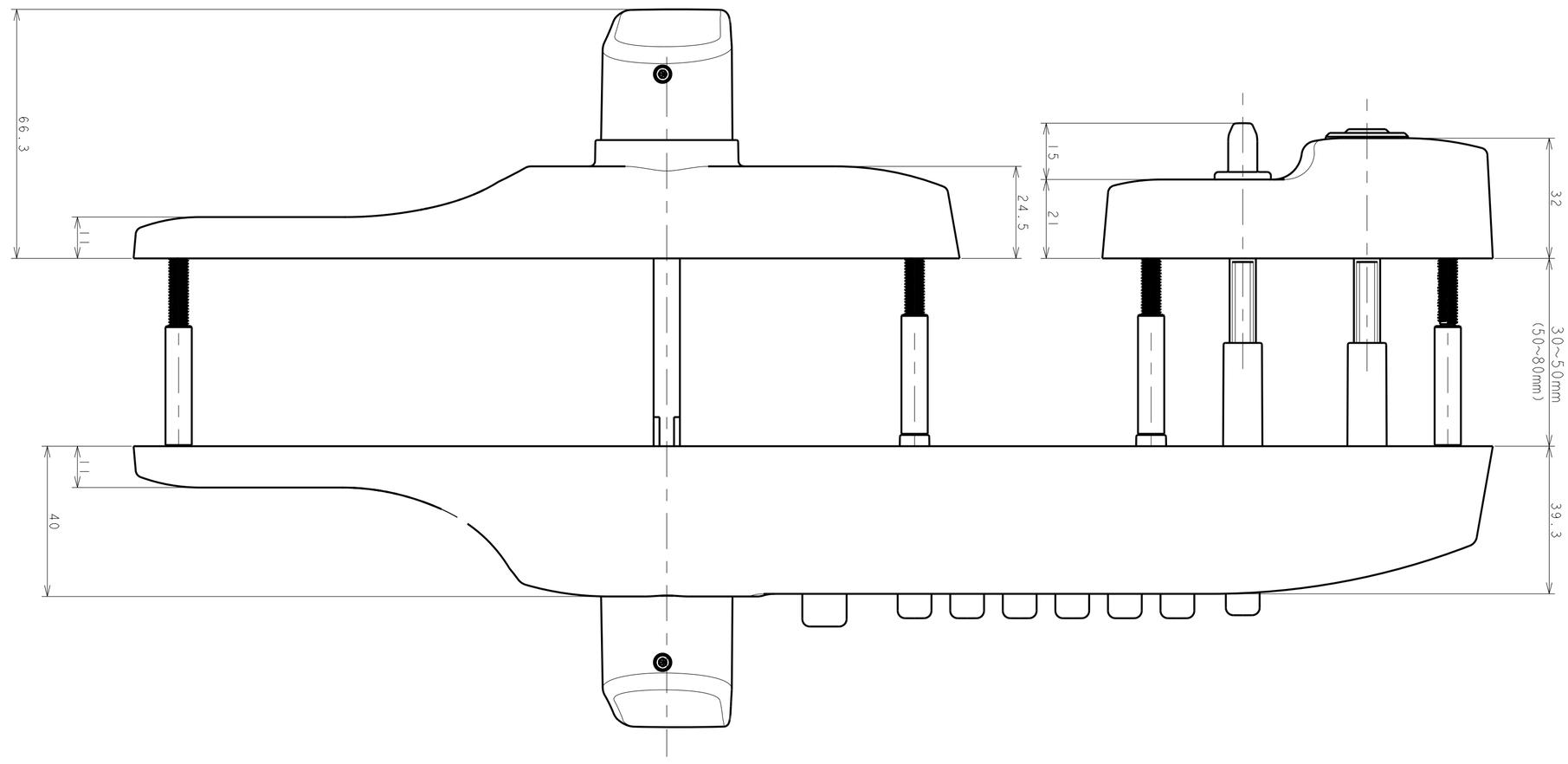
66.3
11
24.5
15
21
32
30~50mm
(50~80mm)
11
40
39.3

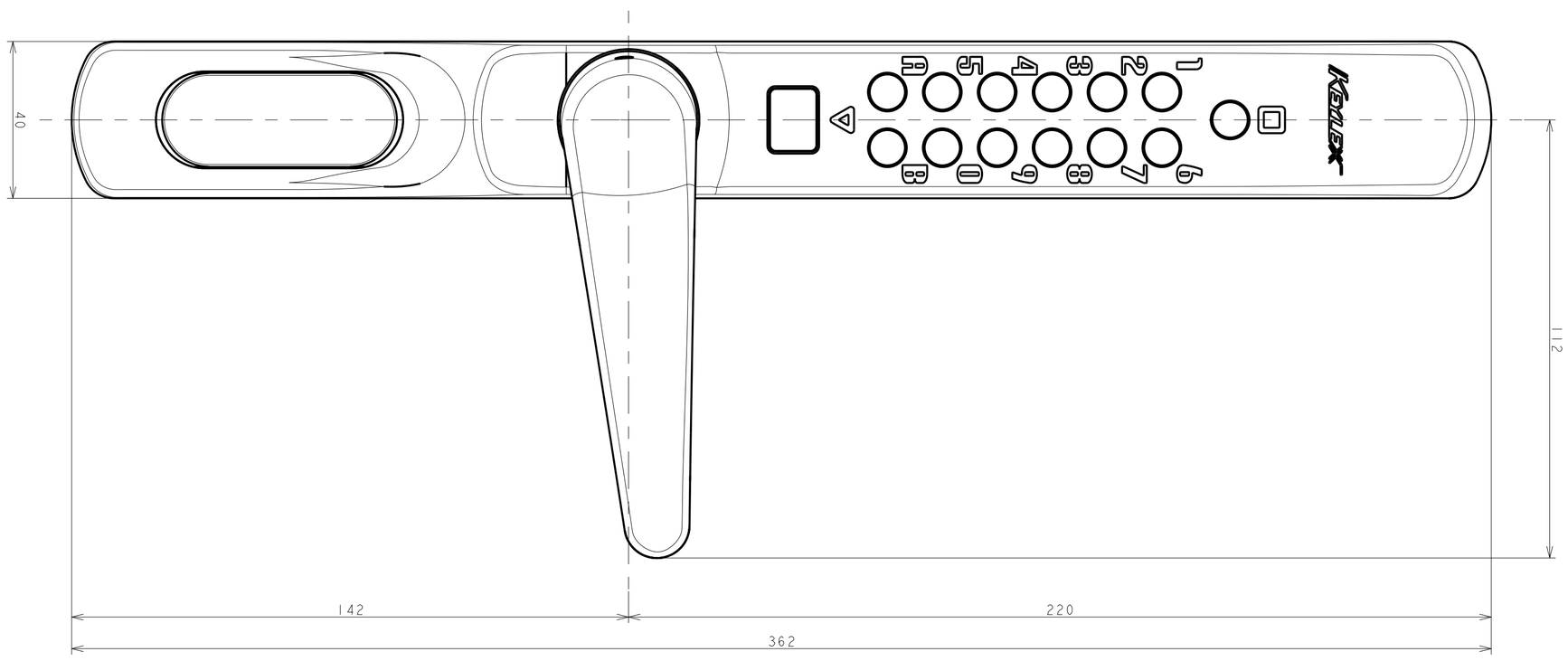
40
112
142
220
362