2613 2614	90° POWER OPENING 160° MAX. OPENING

AUXILIARY STOP RECOMMENDED

LEFT HAND DOOR AND CLOSER SHOWN. RIGHT HAND OPPOSITE | 6/96

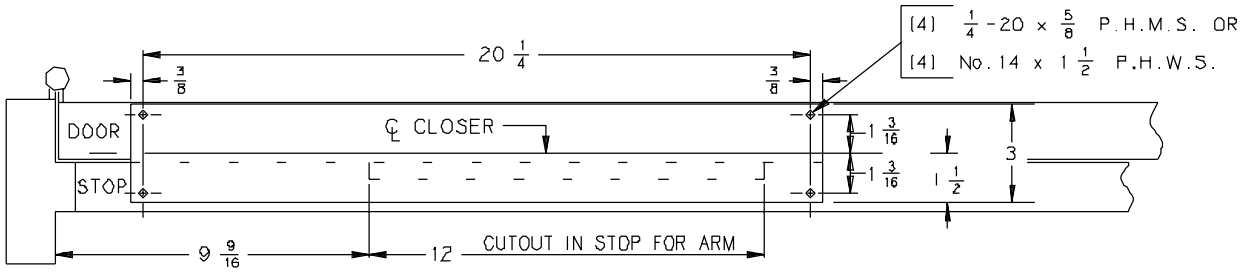

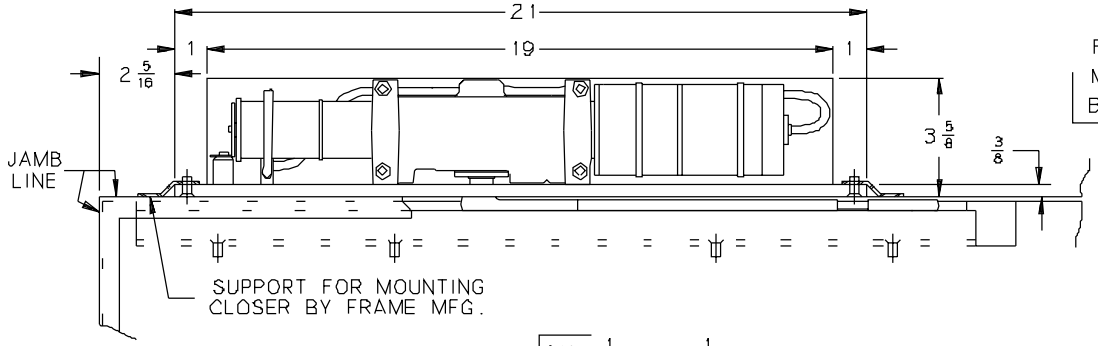

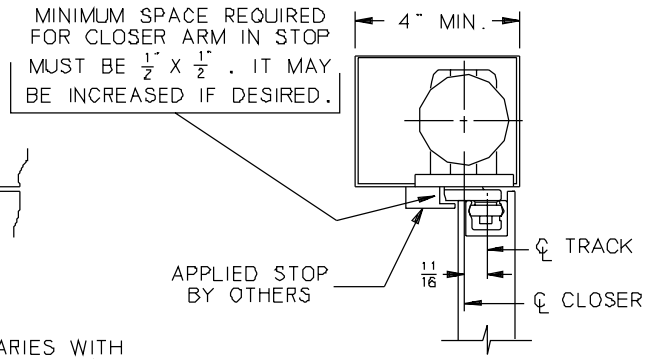

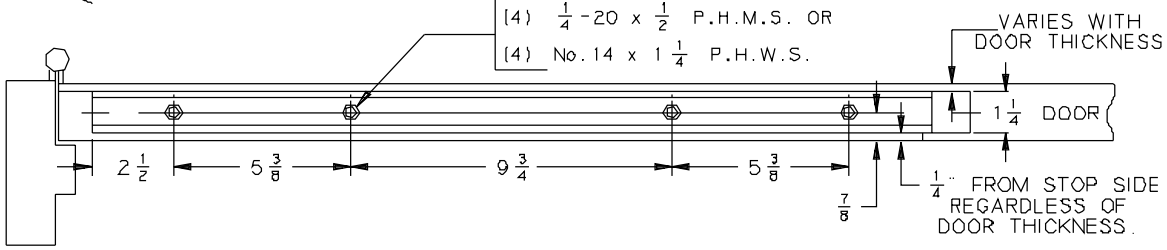

NOTES-

1 - MINIMUM STOP THICKNESS 1/2".

2 - 1/8" DOOR TO SOFFIT CLEARANCE REQUIRED.

3 - 1/8" I.D. TUBING CONNECTED TO CONTROL BOX.

4 - REINFORCING PER.ANSI\SDI-100 RECOMMENDED FOR HOLLOW METAL DOOR & FRAMES.

5 - MAXIMUM ALLOWABLE BUTT SIZE IS 5" X 5".

6 - IF DOOR IS HUNG ON PIVOTS CONSULT FACTORY.

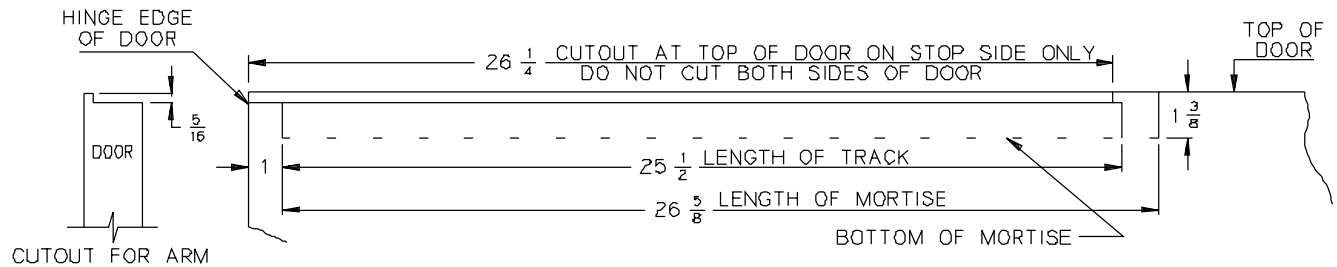

PLAN & ELEVATION OF TOP OF DOOR SHOWING PREPARATION FOR CLOSER TRACK

inch	1/8	1/4	5/16	3/8	1/2	5/8	11/16	7/8	1	1 3/16	1 1/4	1 3/8	1 1/2	2 5/16	2 1/2
mm	3	6	8	10	13	16	17	22	15	30	32	35	38	59	64

inch	3	3 5/8	4	5	5 3/8	9 9/16	9 3/4	12	19	20 1/4	21	25 1/2	26 1/4	26 5/8
mm	76	92	102	127	137	243	248	305	483	514	533	648	667	676

No.	REVISION	BY	DATE
2	TEMPLATE UPDATE	JEJ	6/96

LCN®

APP BY JEJ 6/96

DO NOT SCALE

OVERHEAD CONCEALED / SINGLE LEVER ARM / AUTO-EQUALIZER® CLOSER

2610

© 2000 Ingersoll-Rand Company