FEATURES

HINGE (PULL) SIDE MOUNT

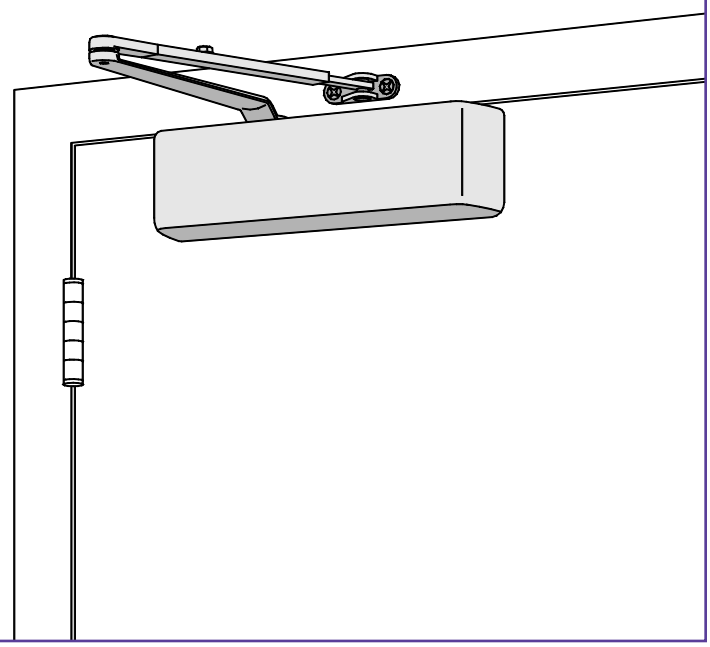

The 4010 SMOOTHEE® is LCN's best performing heavy duty closer designed specifically for institutional and other rugged high traffic applications.

- **Ten Million Cycles**
- **Cast Iron**
- **Forged Steel Main Arm**
- **Double Heat Treated Steel Pinion**
- **All Weather Fluid**
- **LCN® Fast™ Power Adjust**
- **Fast & Accurate Installation**
- **UL & ULC Listed**

- Standard 4010 series closer shipped with regular arm, standard plastic cover, and self reaming and tapping screws. See 4010 Series pages 5 & 6 for options.
- Sized cylinders for interior doors to 5'0" and exterior doors to 4'0".
- Non-sized cylinder adjustable for interior doors to 4'6" and exterior doors to 3'6".
- Closer mounts hinge side, specify right or left swinging door.
- Corner brackets available. See 4010 Series page 6 for options.
- 4011 cylinder meets ADA requirements. See 4010 Series page 7.
- Standard or optional custom powder coat finish.
- Optional plated finish on cover, arm and fasteners.
- Optional SRI primer for installations in corrosive conditions.
- The 4010 Series is UL and ULC listed with regular or fusible link arms for self-closing doors.
- Tested and certified under ANSI Standard A156.4, grade one.

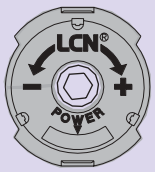

The 4011 includes the **LCN® FAST™ Power Adjust,** *a revolutionary visual indicator for Spring Power Adjustment.*

MOUNTING					FINISH		COVER			CYLINDER					**ARM FUNCTION						
HINGE (PULL) SIDE	TOP JAMB (PULL)	TOP JAMB (PUSH)	PARALLEL ARM	STOP FACE	POWDER COAT	PLATED	PLASTIC	METAL	DESIGNER METAL	NON-HANDED	NON-SIZED	ACCESSIBILITY	DELAYED ACTION	AVB***	REGULAR (DOUBLE)	STANDARD (SINGLE)	HOLD-OPEN	FUSIBLE LINK	EDA/HEDA	CUSH/HCUSH	SCUSH/SHCUSH
●	○	○	○	○	●	●	●	●	○	○	●	♿	●	○	140°	○	140°	140°	○	○	○

● *Available*
○ *Not available*

♿ *Closer available with less than 5.0 lbs. opening force on 36" door.*
***Maximum opening/hold-open point with standard template.*
**** Advanced Variable Backcheck*

LCN CLOSERS
121 W. RAILROAD AVE.
P.O. BOX 100
PRINCETON, IL, USA 61356-0100

PHONE 800-526-2400
FAX 800-248-1460
www.lcnclosers.com
3/04

LCN 4010 SERIES

MOUNTING DETAILS

HINGE (PULL) SIDE MOUNTING

MAXIMUM OPENING

Can be templated for 100°,
Ⓐ = 5 15/16" (151 mm)
Ⓑ = 11 15/16" (303 mm)
or 140°.
Ⓐ = 4 3/16" (106 mm)
Ⓑ = 10 3/16" (259 mm)

Hold-open points up to maximum opening with hold-open arm.

Arm Clearance above door.
Regular arm requires Ⓒ = 1 1/16" (27 mm).
Hold-open arm requires Ⓒ = 1 3/8" (35 mm).
Fusible link arm requires Ⓒ = 1 5/8" (41 mm).

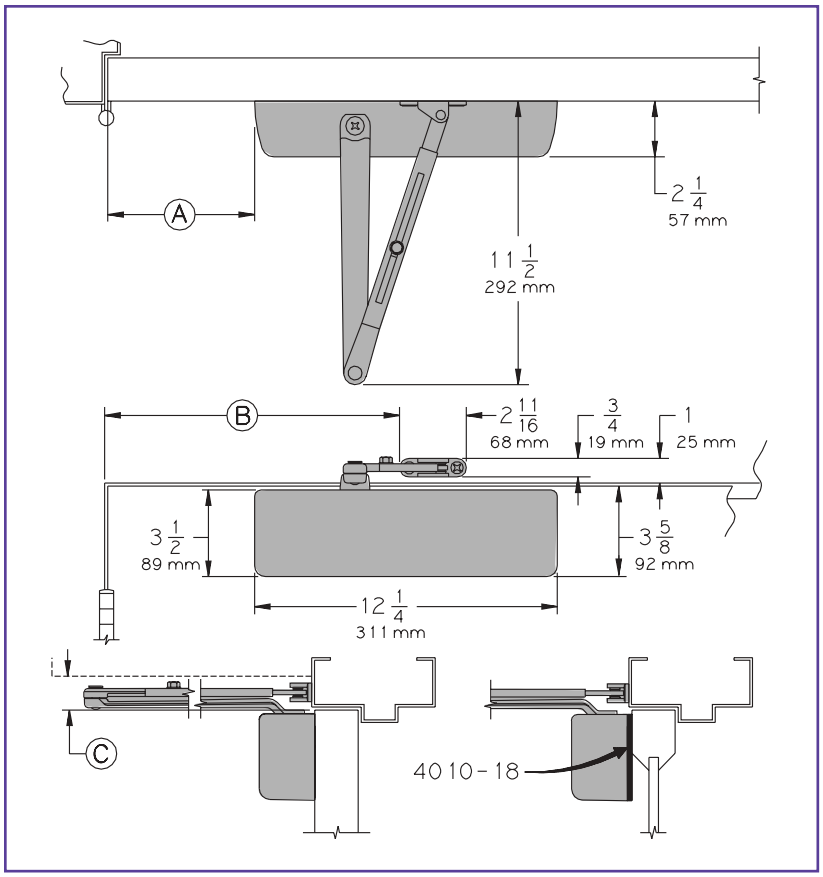

- **Butt Hinges** should not exceed 5" (127 mm) in width.
- **Auxiliary Stop** is recommended at hold-open point or where a door cannot swing 140°.
- **Reveal** should not exceed 3/4" (19 mm). Fusible link arm should not exceed 1/8" (3 mm).
- **Top Rail** less than 3 3/4" (95 mm) requires PLATE, 4010-18. Plate requires 2" (51 mm) minimum.
- **Clearance** of 2 1/4" (57 mm) behind door required for 90° installation.
- **Delayed Action** Add suffix "DEL" to selected cylinder (eg. 4014 DEL). Not available with 4016 cylinder. Delays closing from maximum opening to approximately 70°. Delay time adjustable up to approximately 1 minute.
- **Bull Nose Trim** requires SOFFIT SHOE, 4010-65.
- **Corner Bracket** for a door where top jamb or parallel arm mounting cannot be used. Consult factory on all corner bracket mounts.

Options
- Sized or non-sized cylinder.
- Delayed action cylinder.
- Hold-open, H180 (corner bracket only) hold-open, or fusible link arm.
- Metal or lead lined cover.

Special Templates
Customized installation templates or products may be available to solve unusual applications. Contact LCN for assistance.

LCN CLOSERS
121 W. RAILROAD AVE.
P.O. BOX 100
PRINCETON, IL, USA 61356-0100

PHONE 800-526-2400
FAX 800-248-1460
www.lcnclosers.com

3/04

CYLINDERS

CYLINDER, 4010-3071

Standard, handed cast iron cylinder assembly.

For various applications see "Table of Sizes" on 4010 Series page 7.

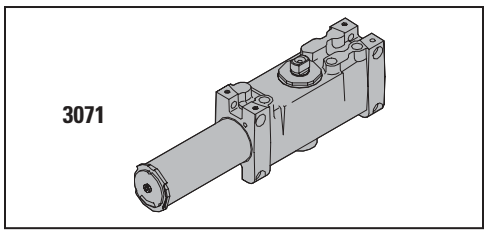

COVERS

COVER, 4010-72

Standard, non-handed plastic cover.

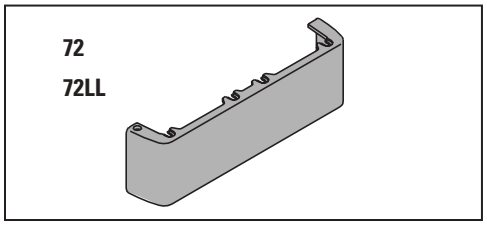

LEAD LINED COVER, 4010-72LL

Optional non-handed cover.

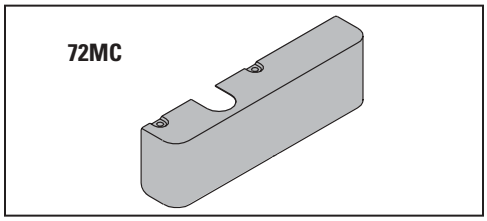

METAL COVER, 4010-72MC

Optional, handed cover. Required for plated finishes and custom powder coat finishes.

ARMS

REGULAR ARM, 4010-3077

Non-handed arm.

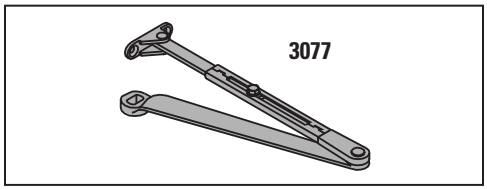

HOLD-OPEN ARM, 4010-3049

Optional, handed arm provides hold-open function, adjustable at elbow.

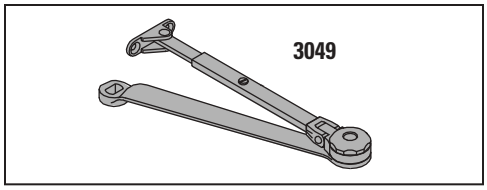

HOLD-OPEN H180 ARM, 4010-3049H180

Optional, handed arm provides hold-open function up to 180°, adjustable at shoe.

Closer must be mounted on 4010-11 corner bracket.

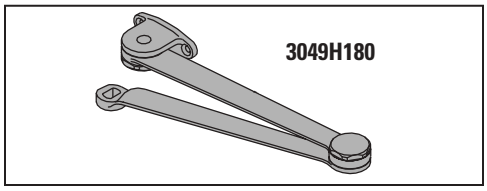

FUSIBLE LINK ARM, 4010-3049FL

Optional, handed arm releases hold-open function when exposed to temperatures above 165° F.

Optional link releases at 135° F.

1/8" (3 mm) maximum reveal.

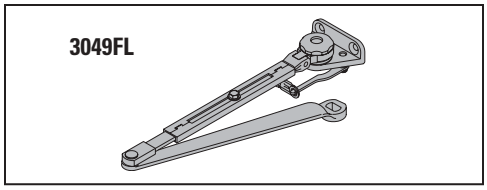

LCN CLOSERS
121 W. RAILROAD AVE.
P.O. BOX 100
PRINCETON, IL, USA 61356-0100

PHONE 800-526-2400
FAX 800-248-1460
www.lcnclosers.com
3/04

INSTALLATION ACCESSORIES

PLATE, 4010-18

Required where top rail is less than 3 3/4" (95 mm).

Plate requires minimum 2" (51 mm) top rail.

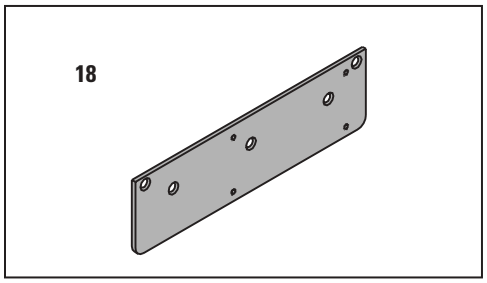

CORNER BRACKET, 4010-11

For doors where top jamb or parallel arm mounted closer can not be used.

Allows 180° opening with regular or H180 hold-open arm.

Projects 5" (127 mm) from stop, 13 11/16" (348 mm) from frame.

Requires opposite hand closer.

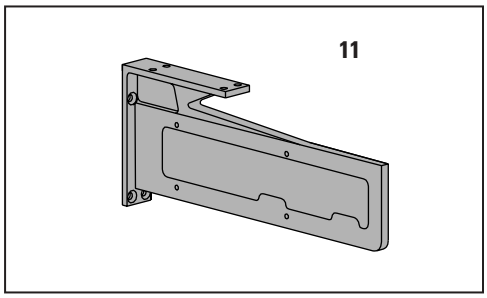

CORNER BRACKET, 4010-16

For doors where top jamb or parallel arm mounted closer can not be used.

Allows 125° opening with regular arm or 100° with hold-open or fusible link arm.

Projects 5" (127 mm) from stop, 12 13/16" (325 mm) from frame.

Requires opposite hand closer.

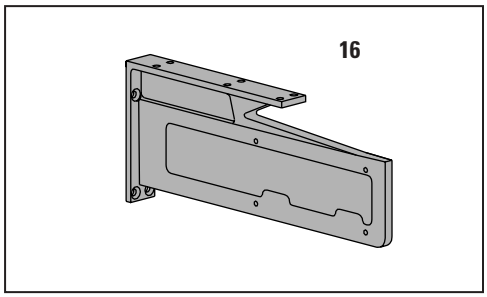

CORNER BRACKET, 4010-17

Allows 110° opening with regular arm.

Designed to lower closer on door for clearance of auxiliary door holders (consult factory).

Projects 6 3/8" (162 mm) from stop, 13 11/16" (348 mm) from frame.

Requires opposite hand closer.

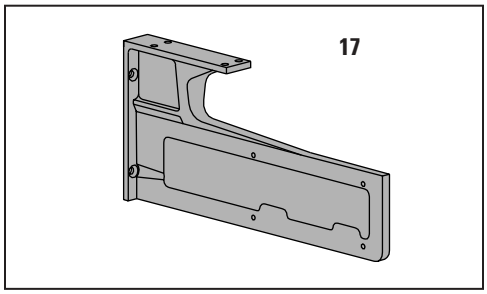

SOFFIT SHOE, 4010-65

Adapts hinge side shoe to rounded or bull nose trim.

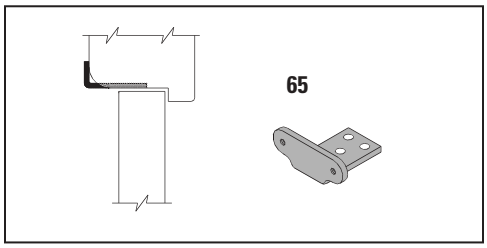

LCN CLOSERS
121 W. RAILROAD AVE.
P.O. BOX 100
PRINCETON, IL, USA 61356-0100

PHONE 800-526-2400
FAX 800-248-1460
www.lcnclosers.com
3/04

TABLE OF SIZES

Select closer based on width of door.
The spring power of non-sized 4011 cylinder is adjustable from size 1 through size 5 and is shipped set to size 3.
Sized 4010 series cylinders available in size 2, 3, 4, 5, or 6.
Closing power of all 4010 Series closers may be increased 50%.
Specify next higher size closer where strong drafts exist.
Delayed action not available with 4016 cylinder.

→ Indicates recommended range of door width for closer size.

EXTERIOR (and VESTIBULE) DOOR WIDTH

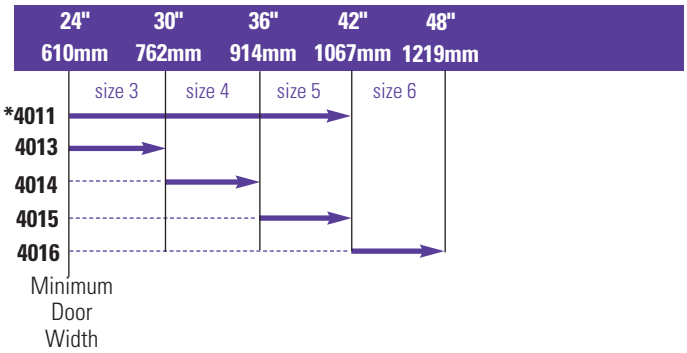

INTERIOR DOOR WIDTH

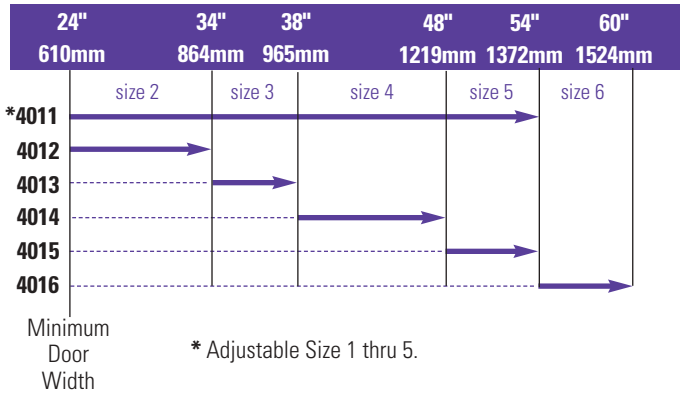

* Adjustable Size 1 thru 5.

REDUCED OPENING FORCE 4010 CLOSERS

CAUTION ! Any manual door closer, including those certified by BHMA to conform to ANSI Standard A156.4, that is selected, installed and adjusted based on ADA or other reduced opening force requirements may not provide sufficient power to reliably close and latch a door.

Refer to POWER OPERATORS section for information on systems that meet reduced opening force requirements without effecting closing power.

	DOOR WIDTH	36"	42"	48"
♿	8.5* lbs.	4011	4011	4011
	5.0* lbs.	4011	4011	4011

** Maximum opening force*

HOW-TO-ORDER 4010 SERIES CLOSERS

1. SELECT CYLINDER SIZE

- ☐ 4011 (adjustable from size 1 to 5)
- ☐ 4012
- ☐ 4013
- ☐ 4014
- ☐ 4015
- ☐ 4016 (DEL not available)

2. SPECIFY HAND

- ☐ RH
- ☐ LH

3. SELECT FINISH

- ☐ Standard Powder Coat _____
  Aluminum, Dark Bronze , Tan, Statuary, Light Bronze, Black, Brass.

Closer will be shipped with:
- STANDARD COVER,
- REGULAR ARM,
- SELF-REAMING and TAPPING SCREWS, unless options listed below are selected.

CLOSER OPTIONS

CYLINDER

- ☐ Delayed Action (DEL)

COVER

- ☐ Lead Lined (LL)
- ☐ Metal (MC)

ARM

- ☐ Hold-Open (H)
- ☐ H180 Hold-Open (H180) (*bracket mount only*)
- ☐ Fusible Link, 165° F*(FL)
  * Optional link releases at 135° F

FINISH

- ☐ Custom Powder Coat (RAL) _____
  (handed metal cover required)
- ☐ Plated Finish, US _____
  (handed metal cover required)
- ☐ SRI primer

SCREW PACK

- ☐ TB* & SRT Screw (TBSRT)
- ☐ Wood & Machine Screw (WMS)
- ☐ TB*, Wood & Machine Screw (TBWMS)
- ☐ TORX Machine Screw (TORX)
- ☐ TB* & TORX Machine Screw (TBTRX)
  * Specify door thickness if other than 1 3/4".

INSTALLATION ACCESSORIES

- ☐ Plate, 4010-18
- ☐ Bracket, 4010-11
- ☐ Bracket, 4010-16
- ☐ Bracket, 4010-17
- ☐ Soffit Shoe, 4010-65

SPECIAL TEMPLATE

- ☐ ST- _____